Andersen Electric Window Opener

for Andersen Awning and Roof Windows

Congratulations! You have just purchased one of the many fine Andersen® products. For ease of installation and continued enjoyment of your Andersen® product please read and follow this Installation Guide completely. You may direct any questions about this or other products to your local Andersen® dealer. Andersen® dealers can be found in the Yellow Pages under Windows.

Installer: Please leave the Installation Guide with the home owner to file for future reference. Thank you for choosing Andersen®.

Importance of Proper Assembly and Installation

Proper assembly, installation and maintenance of Andersen products is essential if the benefits of experienced product design and engineering, quality materials, and skilled workmanship are to be fully attained. General recommendations regarding assembly and installation are guidelines only. Every assembly and installation is different (windloads, structural support, etc.) and, Andersen strongly recommends consultation with an Andersen supplier or an experienced contractor, architect, or structural engineer prior to the assembly and installation of any Andersen product. Assembly and installation of Andersen products is the sole responsibility of the architect, building owner, contractor and/or consumer and Andersen has no responsibility in this regard.

The Andersen Electric Window Opener is designed for easy installation. Cords can be hidden behind curtains or furniture. Clips, channels or wire mouldings may also be used to cover cords. If wires are to be concealed inside the walls, it is recommended that a qualified electrician wire this unit. Please read this entire Installation Guide before starting work.

Parts Included

(1) Power Operator
(1) Power Supply Unit
(1) Command Center
(1) Command Center Mounting Disc
(1) Rain Sensor
(1) Safety Connector
(2) Rain Sensor Mounting Screws
(2) Power Operator Bracket Machine Screws
(2) Power Supply Mounting Screws with Wall Anchors

(1) Command Center Mounting Disc Screw with Wall Anchor

For use with Awning Window Installations

(1) Power Operator Awning Mounting Bracket
(2) #6 x 1-5/8" Screws

For use with Roof Window Installations

(1) Power Operator Roof Window Mounting Bracket
(2) #8–32 x 3/8" Screws

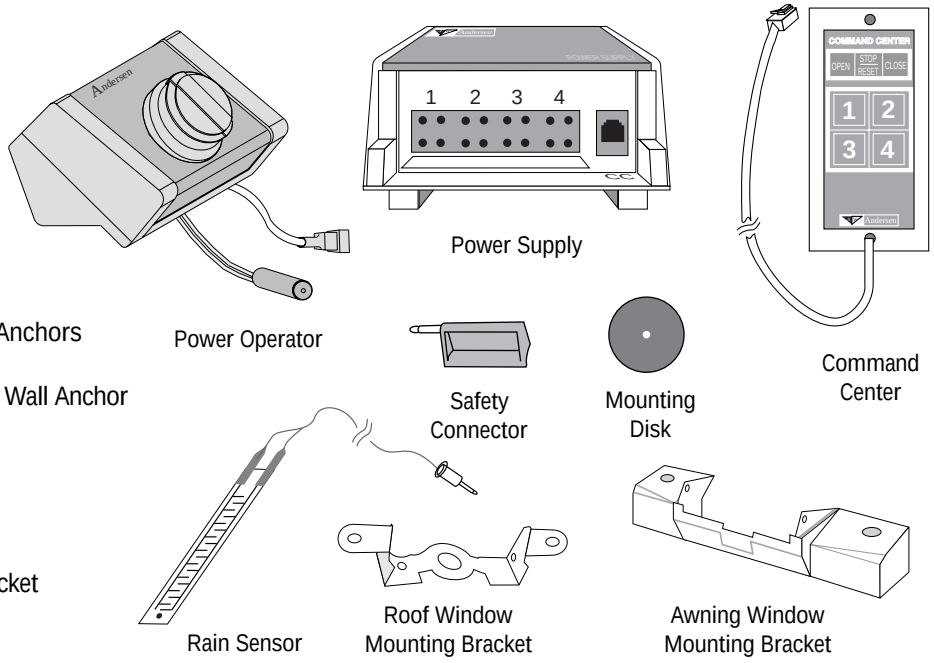

Optional Accessories

The basic Electric Window Opener kit provides all materials needed for use on one Andersen Venting Roof Window, Vent-Tilt Roof Window, or Perma-Shield Awning Window. Additional power operators can be purchased separately from your Andersen dealer to open and close up to four windows from one command center. Available options include: • Power Operator Extension Cord – Choose 10 ft. or 20 ft. lengths. • Add–on Power Operator Package – Contains one power operator with mounting bracket, safety connector, rain sensor, screws and installation guide. • Command Center Extension Cord – Choose 10 ft. or 20 ft. lengths. • Rain Sensor – With 2 ft. cord.

⚠ WARNING

Windows are sometimes used for emergency exits. Check your local building codes or obtain professional guidance from a qualified building professional to insure that emergency exit requirements are met.

⚠ WARNING

Improper use of hand or power tools could result in personal injury and/or product damage. Follow equipment manufacturer's instructions for safe operation. Always wear safety glasses.

⚠ WARNING

Use of ladders and/or scaffolding and working at elevated levels may be hazardous. Follow equipment manufacturer's instructions for safe operation. Use extreme caution when working around window and door openings. Personal injury and/or falls could occur.

⚠ WARNING

Weight of window and door unit(s) and accessories will vary. Use a reasonable number of people with sufficient strength to lift, carry and install window and door unit(s) and accessories. Always use appropriate lifting techniques.

Copyright 1996 Andersen® Corporation, Bayport, MN 55003
SUP 80461 Instruction Guide # 0005213 Revised 02/18/03

Install Power Operator Motor on Awning Windows

NOTICE

IMPORTANT INFORMATION
for Awning Windows with Locks

Andersen recommends that the Electric Window Opener be installed on Perma Shield Awning Windows **without** locks. Perma Shield Awning Windows without locks meet performance Grade 20 which complies with N.W.W.D.A. industry standards for residential construction. Perma Shield Awning Windows with locks are rated Grade 60, and are suitable for heavy commercial construction. Windows without locks are available upon special request through your Andersen dealer. If your window has locks, do one of the following before installing the Electric Window Opener:

Remove the locks from the window frame and the keepers from the sash. Plug the screw holes and replace side stops with a full length stop.

OR

Remove the keepers from the sash and plug the screw holes. Position the lock handles in the down or locked position.

If you have questions about removing the locks or keepers from your window unit, request assistance from a qualified contractor.

Failure to perform one of these procedures will prevent the Electric Window Opener from being able to close the window to a weather tight position.

A1. Clean and Lubricate Hinge Slide Area.

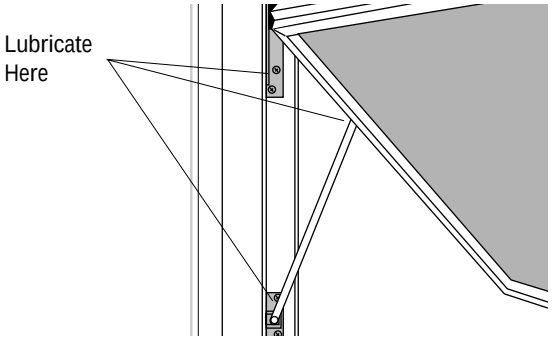

- Remove dirt with clean cloth and grease-cutting household cleaner.
- Apply heavy bodied silicone based lubricant to slide surfaces.
- Open and close window several times to insure smooth operation.

A2. Attach Rain Sensor.

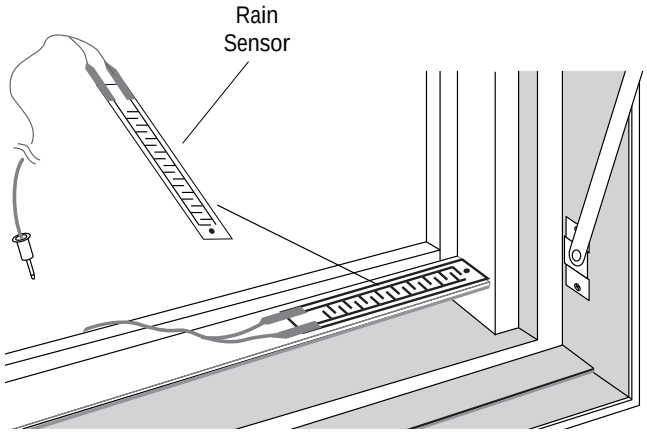

NOTICE

Only one rain sensor is needed for each group of four windows. More sensors may be used if desired, especially for multiple windows facing different directions.

- Open window.
- Clean top surface of sill
- Peel paper backing from *Rain Sensor*.
- Press *Rain Sensor* into place on sill close to the side.
- Insert #5 x 1/2" wood screw.

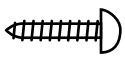

⚠ CAUTION

Do not over tighten screws. Heads should just touch rain sensor surface.

A3. Remove Operator Crank.

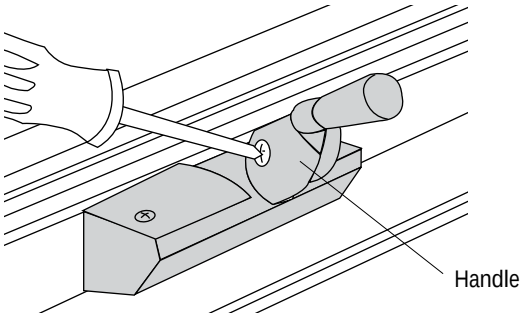

- Close window.
- Loosen set screw and remove *Operator Handle* from shaft. *Operator Handle* will not be replaced.

A4. Attach Awning Window Mounting Bracket to Power Operator.

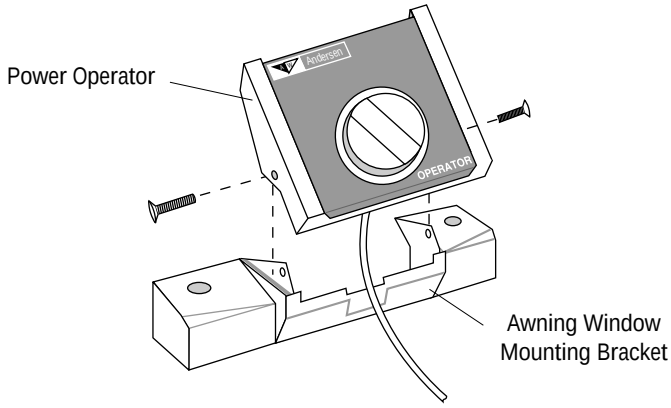

- Position *Mounting Bracket* under *Power Operator*. Cord should pass in front of *Mounting Bracket.*
- Insert bracket screws through *Power Operator* into threaded holes in *Mounting Bracket*; use #6 - 32 x 1/2" machine screws.

A5. Plug Rain Sensor into Socket on Power Operator.

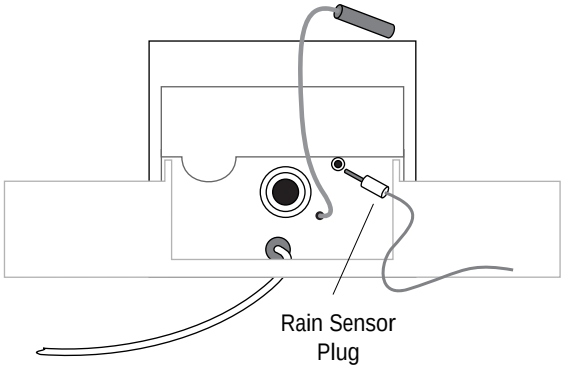

⚠ CAUTION

Do not allow staples to cut cord. A damaged cord may prevent the electric opener form operating properly. Tuck excess cord behind operator.

- Insert *Rain Sensor* plug into hole marked “sensor” on back of *Power Operator*.
- Secure cord with small electrical staples

A6. Slip Power Operator over Crank Shaft.

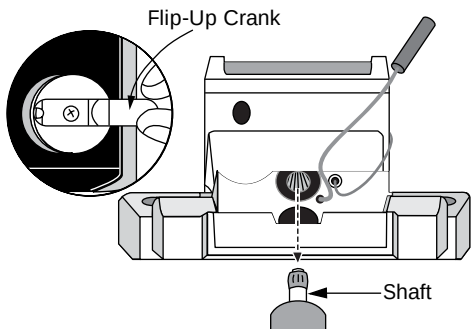

⚠ CAUTION

Do not pinch cords behind power operator or bracket. A damaged cord may prevent the electric opener form operating properly.

- Slide power operator over shaft. *Mounting Bracket* should be set over existing awning operator cover.
- Use flip-up crank to help align power operator with shaft.

A7. Fasten Mounting Bracket to Sill.

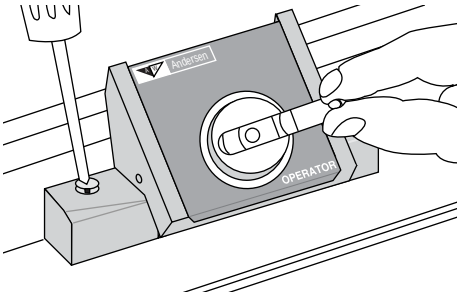

- Fasten *Power Operator* to window sill with screws; use #6 x 1-5/8" oval head screw.

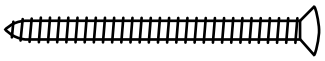

A8. Connect Safety Connector.

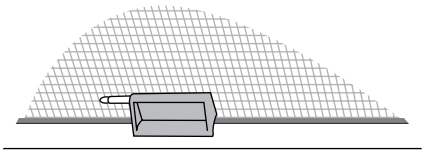

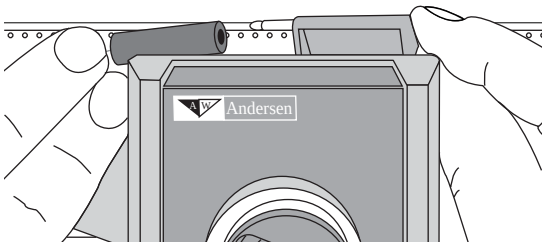

- Peel paper backing from *Safety Connector.*
- Press *Safety Connector* into position on frame of screen above *Power Operator.*
- Connect cord from *Power Operator* to *Safety Plug* on screen.

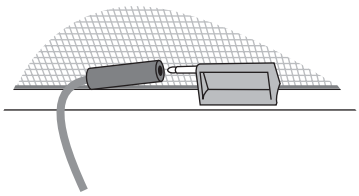

- Continue to **Step 11 - Connect Electric Window Opener Components.**

Install Power Operator Motor on Roof Windows

R1. Attach Rain Sensor.

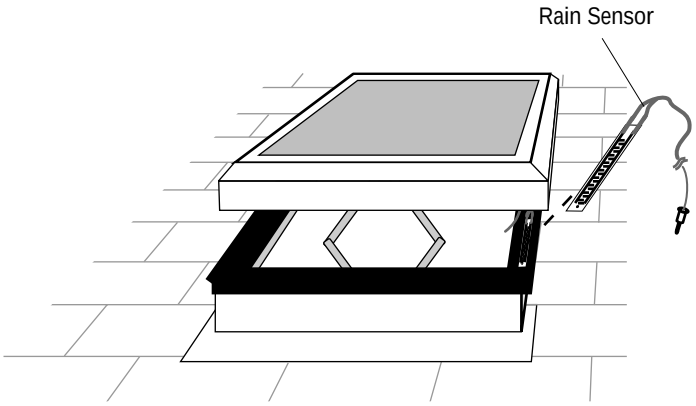

NOTICE

Only one rain sensor is needed for each group of four windows. More sensors may be used if desired, especially for multiple windows facing different directions.

- Open window.
- Clean top surface of frame gasket.
- Peel paper backing from *Rain Sensor*.
- Press sensor into place near sill end of frame.
- Insert screws; use #5 x 1/2" wood screw.

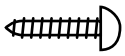

⚠ CAUTION

Do not over tighten screws. Heads should just touch rain sensor surface.

R2. Remove Handle, Hub Cover, and Operator Cover.

- Close window.
- Loosen set screw and remove *Operator Handle* from shaft.
- Remove hub cover screws and *Hub Cover*.
- Remove operator cover screws and *Operator Cover.*

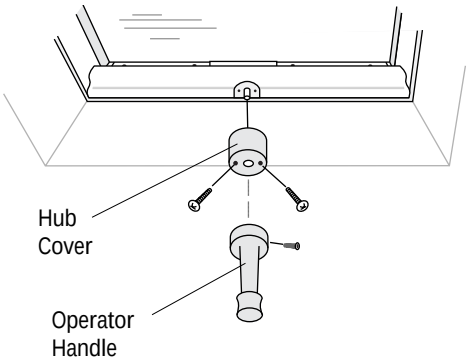

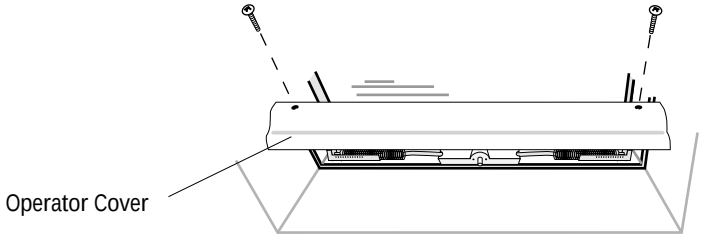

R3. Drill Holes at Marks on Inside of Cover.

- Locate marks on the inside of *Operator Cover.*

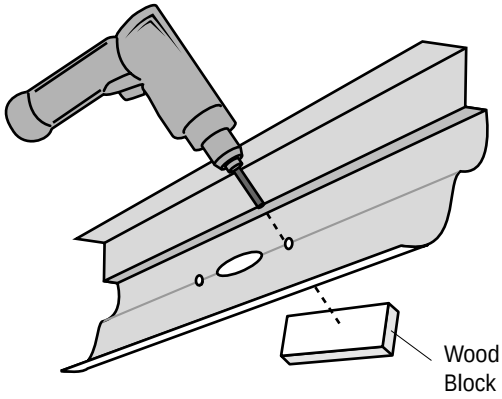

⚠ CAUTION

Hold wooden block against outside surface of cover while drilling to prevent veneer from splitting.

- Drill 5/16" hole through cover.

⚠ WARNING

Check operating mechanism counterbalance spring adjustments to insure they are correctly set for your roof pitch before replacing the operator cover. Refer to Step R4 on the next page for the correct adjustment settings.

R4. Set Spring Tension on Both Sides.

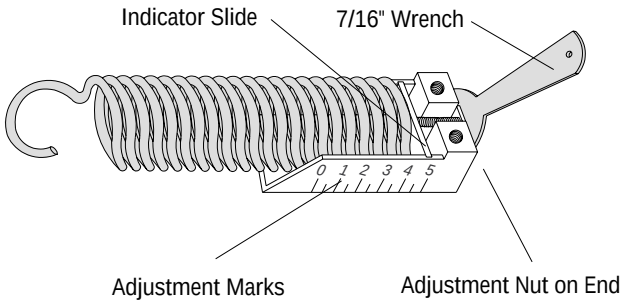

⚠ WARNING

Do not attempt to remove or repair counterbalance springs yourself. Springs are under tension and can exert strong force causing severe injury. Call a competent window service person if operating mechanism needs repair.

- Move *Indicator Slide* to adjustment mark shown in **Sash Adjustment Table** by turning *Adjustment Nut* at outside end of spring housing using a 7/16" wrench.

Sash Adjustment Table

for Andersen Venting Roof Windows

All windows are adjusted at the factory for a 8/12 (37 degree) roof pitch

Tempered Glass

Window Unit	Inside Glass (inches)	Roof Pitch					
		4/12 18 deg.	**6/12** 30 deg.	**8/12** 37 deg.	**12/12** 45 deg.	**24/12** 60 deg.	**68/12** 80 deg.
2127	19 x 24 1/2	1.5	1.5	1	1	0.5	0.5
2138	19 x 35 1/2	3	3	2.5	2	1.5	1.5
2146	19 x 43 1/2	4	4	3.5	3	2	2.5
2157	19 x 54 1/2	4.5	4.5	4	3.5	2.5	2.5
2838	25 1/2 x 35 1/2	3.5	3.5	3	2.5	1.5	2
2846	25 1/2 x 43 1/2	4	4	3.5	3	2	2.5
2857	25 1/2 x 54 1/2	5	5	4.5	4	2.5	3.5
4446	41 1/2 x 43 1/2	2	2	1.5	1	0	1
4457	41 1/2 x 54 1/2	3.5	3	2.5	2	0.5	1.5

Laminated Glass

Window Unit	Inside Glass (inches)	Roof Pitch					
		4/12 18 deg.	**6/12** 30 deg.	**8/12** 37 deg.	**12/12** 45 deg.	**24/12** 60 deg.	**68/12** 80 deg.
2127	19 x 24 1/2	2	2	1.5	1.5	1	1.5
2138	19 x 35 1/2	3.5	3.5	3	3	2	2.5
2146	19 x 43 1/2	5	5	4.5	4	3	3.5
2157	19 x 54 1/2	5	5	5	5	3.5	3.5
2838	25 1/2 x 35 1/2	4.5	4.5	4	3.5	2.5	3.5
2846	25 1/2 x 43 1/2	5	5	4.5	4	3	4
2857	25 1/2 x 54 1/2	5	5	5	5	4	4.5
4446	41 1/2 x 43 1/2	3.5	3.5	3	2.5	1	1
4457	41 1/2 x 54 1/2	5	4.5	4	3.5	2	1.5

R5. Replace Operator Cover.

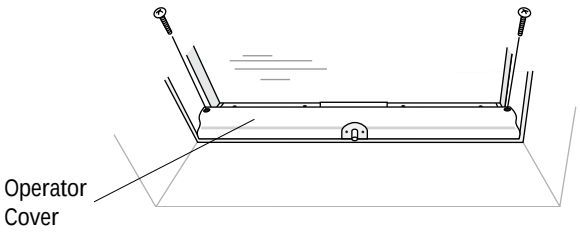

- Carefully replace *Operator Cover* and tighten screws.

⚠ CAUTION

Do not replace hub cover and handle.

R6. Attach Roof Window Mounting Bracket to Power Operator.

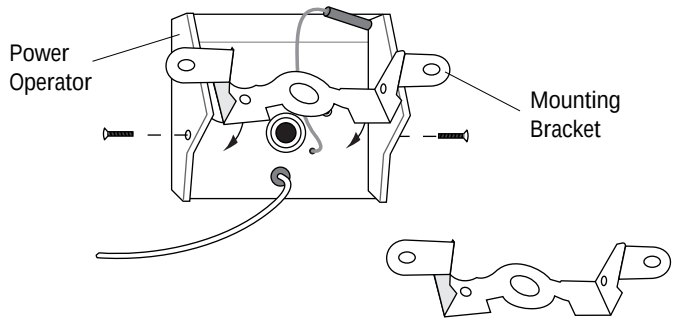

- Position *Mounting Bracket* against back of *Power Operator.*
- Insert bracket screws through *Power Operator* into threaded holes in bracket; use 6 - 32 x 1/2" machine screws.

⚠ CAUTION

Do not pinch cords behind power operator or bracket. A damaged cord may prevent the electric opener form operating properly.

R7. Plug Rain Sensor into Socket on Power Operator.

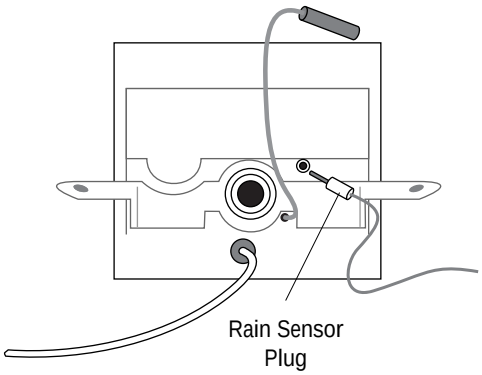

- Insert *Rain Sensor* plug into hole marked “sensor” on back of power operator.
- Secure cord with small electrical staples

⚠ CAUTION

Do not allow staples to cut cord. A damaged cord may prevent the electric opener form operating properly. Tuck excess cord behind operator.

R8. Slip Power Operator over Crank Shaft.

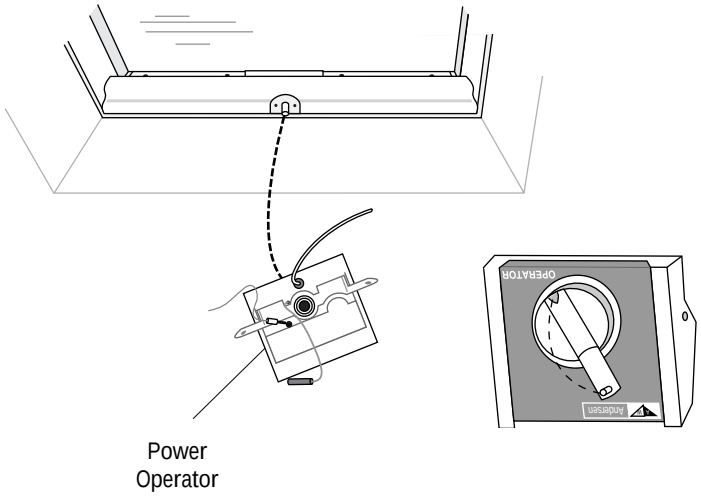

- Slide *Power Operator* over shaft.
- Use flip-up crank to help align *Power Operator* with shaft.

R9. Fasten Mounting Bracket to Operator Mechanism.

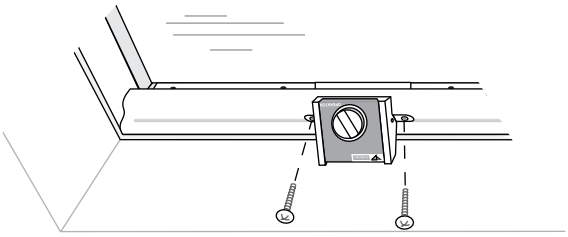

- Insert power operator mounting screws through bracket and holes drilled in cover and tighten screw; use #8 - 32 x 3/4" machine screw.

NOTICE

Align drilled holes in cover with threaded holes in underlying operating mechanism.

R10. Connect Safety Connector.

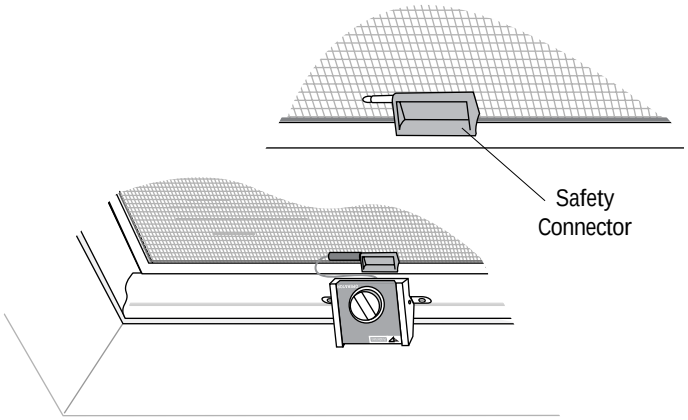

- Peel paper backing from *Safety Connector.*
- Press *Safety Connector* into position on frame of screen above *Power Operator.*
- Connect cord from *Power Operator* to *Safety Connector* on screen.

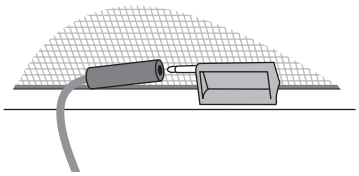

- Continue to **Step 11 - Connect Electric Window Opener Components.**

Connect Electric Window Opener Components

for Awning Windows and Roof Windows

11. Place Components and Route Cords.

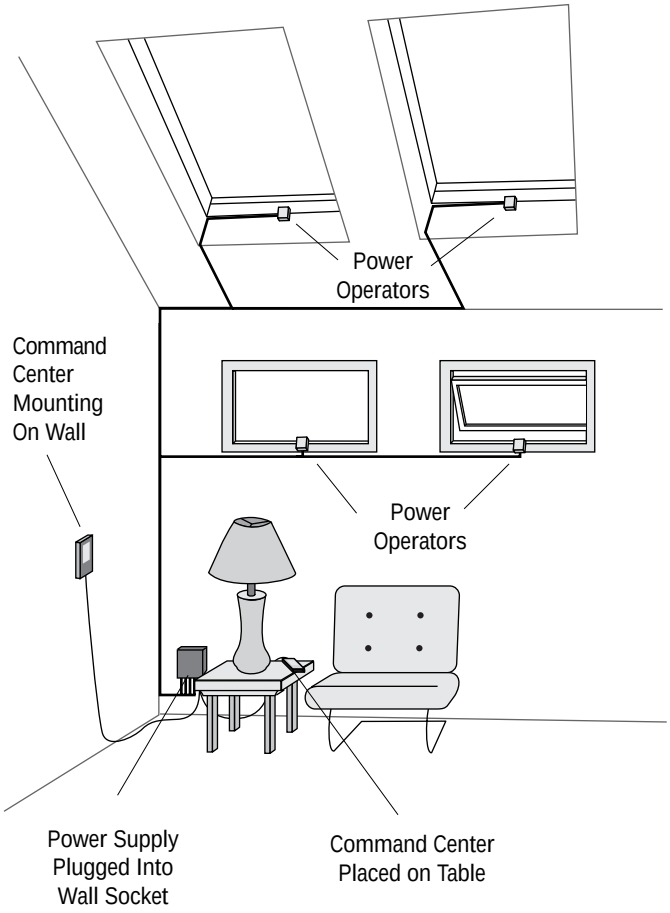

⚠ WARNING

Do not plug power supply into electrical outlet until all power operator cords and the command center cord have been connected.

- Place *Power Supply* at wall outlet near *Power Operator.*
- Place *Command Center* on a table or other convenient location, or use command center *Mounting Disk* to attach *Command Center* to a wall.
- Cords may be concealed behind furniture, curtains, along corners, or under mouldings and baseboards.

NOTICE

Cords furnished on power operators and the command center are ten feet long. Ten and twenty foot extension cords may be purchased separately from your Andersen dealer.

⚠ CAUTION

Request assistance from qualified electrician if wires are to be concealed inside walls.

12. Plug Cords into Power Supply.

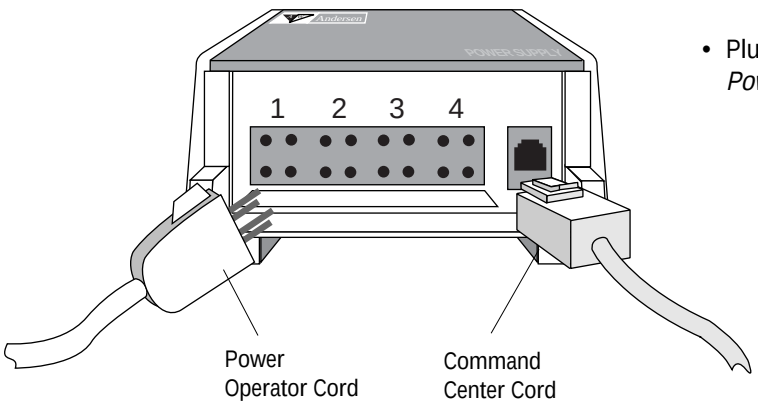

- Plug power operator cords into numbered sockets on bottom of *Power Supply.* Numbers show operating sequence.
- Plug command center cord into modular socket on bottom of *Power Supply.*

13. Plug Power Supply into Electrical Outlet.

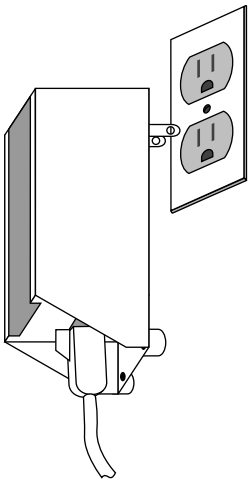

- Plug *Power Supply* into electrical outlet.
- Mark wall through holes at bottom of *Power Supply,* then unplug *Power Supply* from outlet.

14. Secure power Supply to Wall.

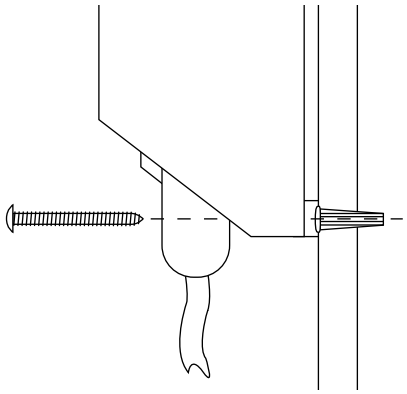

- Drill 7/32" anchor hole in wall and insert anchor.
- Plug *Power Supply* into electrical outlet.
- Insert screws; use #8 x 1-1/2" truss head screws.

15. For Wall Mounting of Command Center.

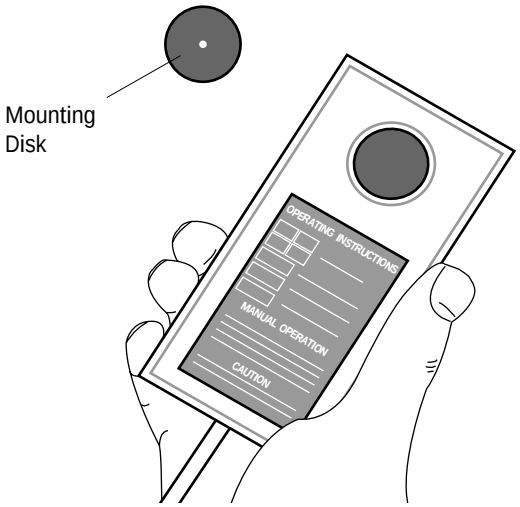

- Drill 3/16" anchor hole in wall and insert wall anchor.
- Insert command center mounting screw through mounting disk and into wall anchor; #6 x 3/4" truss head screws.

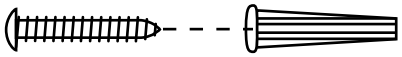

Operating Windows from Command Center

⚠ WARNING

Do not use Electric Window Opener to operate windows unless safety connector and screen are in place. Safety connector protects against accidental injury caused by the closing action of the window.

Windows may be opened or closed manually for emergencies by using flip-up cranks located on each Power Operator unit. Familiarize all occupants with manual operation of windows.

Do not depend on rain sensor to close windows during severe weather. Power failure may prevent the Power Operator from closing the window. Close windows from Command Center or use flip-up cranks on Power Operator.

Open All Windows

PRESS

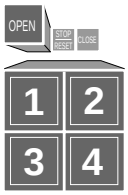

- All windows will open, one at a time, starting with window #1.
- Electric Opener will stop automatically when all windows are open.

Close All Windows

PRESS

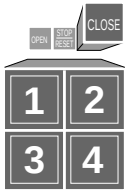

- Each window will close, one at a time, starting with window #1.
- After closing, each motor will reverse a small amount to relieve tension on window mechanisms.
- Electric Opener will stop automatically when all windows are closed.

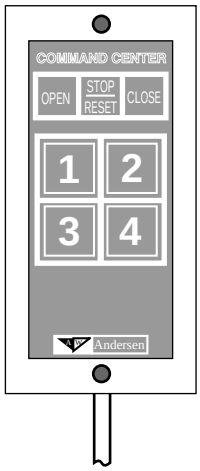

Open Selected Windows

PRESS WINDOW NUMBER(S)

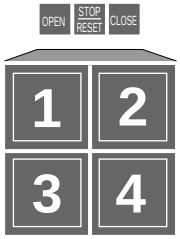

THEN PRESS

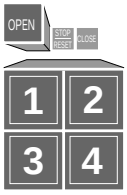

- The selected windows will open , one at a time, starting with window #1.
- *Electric Opener* will stop automatically when last selection is open.
- If an unused number is selected, *Power Supply* will click as it cycles past that selection.

Close Selected Windows

PRESS WINDOW NUMBER(S)

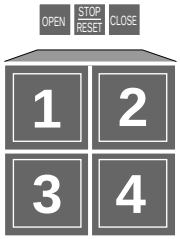

THEN PRESS

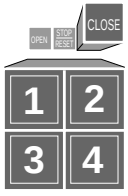

- The selected windows close, one at a time, starting with window #1.
- *Electric Opener* will stop automatically when last selection is closed.
- If an unused number is selected, *Power Supply* will click as it cycles past that selection.

Open or Close Window Part Way

PRESS

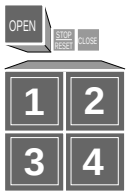

OR

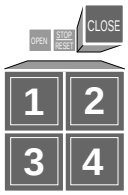

THEN PRESS

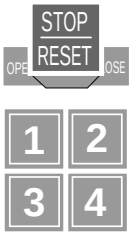

- Windows will open or close as commanded until the Stop/Reset button is pressed.
- When Stop/Reset is pressed, windows will stop where they are.

Correcting Operational Difficulties

Symptom	First try…	Next try…	Finally…
Window will not open or close when commanded.	1. Press STOP/RESET button. 2. Retry OPEN or CLOSE button.	1. Be sure safety connector and screen are in place. 2. Be sure power supply is securely plugged into electrical outlet. 3. Be sure power operator and command center cords are securely plugged into power supply. 4. Check to insure electrical power is present at outlet. 5. Look for obstructions blocking window movement.	1. Unplug power supply from electrical outlet. 2. Wait 10 seconds. 3. Plug power supply into electrical outlet and operate window. **If Problem Continues…** Request assistance from a qualified electrician to insure that the electrical power at the outlet is at the correct voltage.
Window stops too soon when opening or closing.	Repeat operation to be sure that the STOP/RESET button was not pressed accidentally.	1. Look for obstructions blocking window movement. 2. Wait several minutes after removing obstruction to allow overload protector in power supply to reset.	Awning Windows. Clean and lubricate hinge slide areas. (Refer to **Step A1** in this Electric Window Opener Installation Guide). Roof Windows. Check operating mechanism spring adjustments. (Refer to **Step R4 - Set Spring Tension** in the **Install Power Operator Motor on Roof Windows** section in this **Installation and Operation Guide,** or the **Basic Installation Guide** supplied with Andersen Venting Roof Windows).
Windows do not operate in the commanded sequence.	Be sure cords from power operator units are plugged into the desired power supply sockets (Example: Window #1 should be in socket #1).		
Power Operator unit on window runs but window does not move.	Snap flip-up crank handle firmly into its folded position.		

NOTICE

If a problem cannot be solved, contact your Andersen dealer for assistance.

Power Operators reverse slightly when the window reaches fully opened or closed positions. This reduces tension on the operating mechanisms and makes it easy to lift the flip-up crank.

If a rain sensor causes windows to automatically close, the windows can be reopened from the command center. However, the rain sensor will not automatically close the windows again until the sensor has dried.

Contractor Information Sheet
For Andersen® Electric Window Openers

This Contractor Information sheet gives supplemental guidance for concealing Electric Window Opener wiring inside walls and ceilings. This information is intended for use by professional contractors who have prior knowledge of local electrical and building codes. Read this information sheet and the *Installation and Operation Guide* supplied with the Andersen Electric Window Opener before you begin working. Comply with all local building and electrical codes.

A. To Extend Command Center Cable

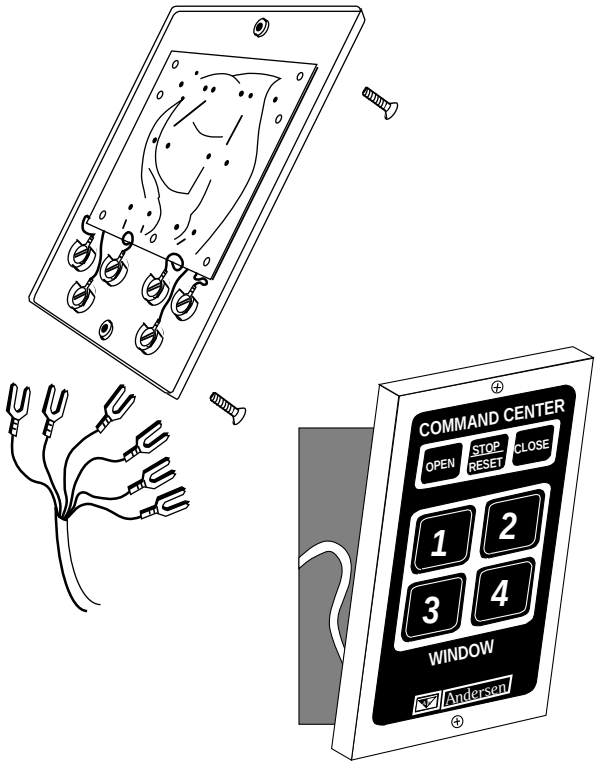

- Run 6 conductor flat cable from power supply to command center location. Ten and twenty foot Andersen command center extension cords are available from your local dealer. Leave 4" to 6" of wire extending beyond electrical box. (Refer to **Section D**).
- Remove back of command center case (screws are located at top and bottom of front panel). Command Center can be mounted over junction box with screws and anchors provided.
- Remove command center cord by loosening 6 terminal screws inside command center case.
- If Andersen extension cords are not used, Save modular plug from existing cable to splice onto new extension cord at power supply end.
- Strip wires extending from electrical box, exposing about 1/2" of bare wire.
- Wrap wires around terminals inside command center case. Crimp terminal connectors may be an alternative.
- Maintain consistent wire color throughout system to insure correct polarity and window operation.
- Splice modular plug cut from existing cable onto power supply end of custom extension cord. Splice with wire nuts, crimp connectors, or twisted and soldered joint. Insulate splice with electrical tape.

B. Power Supply

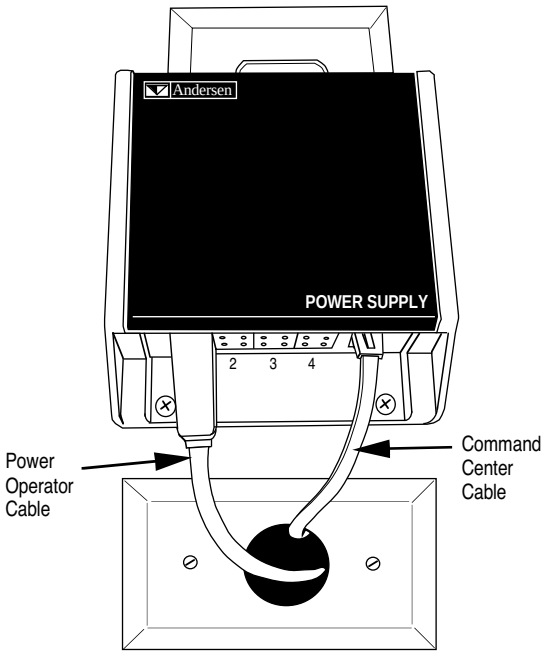

⚠ WARNING

- Mount power supply indoors where temperature does not drop below -20°F or exceed +150°F.
- Do not plug power supply into electrical outlet until all electrical connections have been completed.

- Install electrical box near outlet where power supply will be used.
- Run cords from power operator and command center to electrical box. Ten and twenty foot Andersen extension cords are available from your local dealer. Leave 4' to 6" of wire extending beyond box. (Refer to **Section D**).
- Pass power operator and command center cords through 3/4" hole in electrical box. Protect cord gromments if metal box cover plates are used.
- If Andersen extension cords are not used, cut and splice 4 prong plug from existing cable onto custom extension cord at power supply end. Cut and splice 4 prong receptor from existing cable onto custom extension cord at power operator end.
- Plug cords into power supply.

Copyright © 1992 Andersen Corporation, Bayport, Minnesota 55003

C. Standard Cords

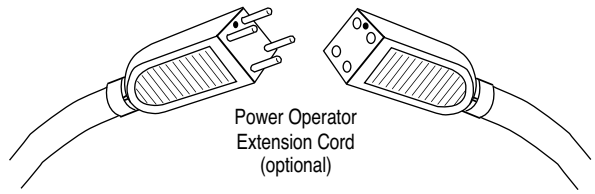

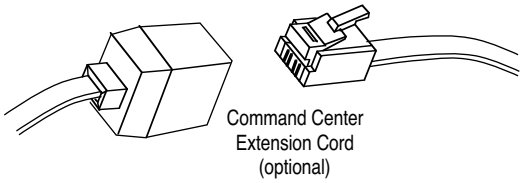

1. Standard cords.

	Power Operator	Command Center
Length:	10 ft.	10 ft. (attached)
Cord:	Round 4 conductor	Flat 6 conductor
Connector:	Special 4 prong plug and 4 prong receptor	6 wire modular plug

2. Optional extension cords available from Andersen dealers.

Length:	10 ft. or 20 ft.	10 ft. or 20 ft.
Cord:	Round 4 conductor	Flat 6 conductor
Connector:	Special 4 prong plug and 4 prong receptor	6 wire modular plug and modular receptor

D. Custom Wiring Information (when other than Andersen extension cords are used)

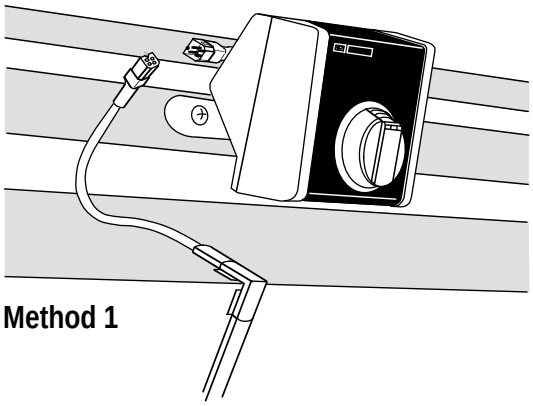

Method 1

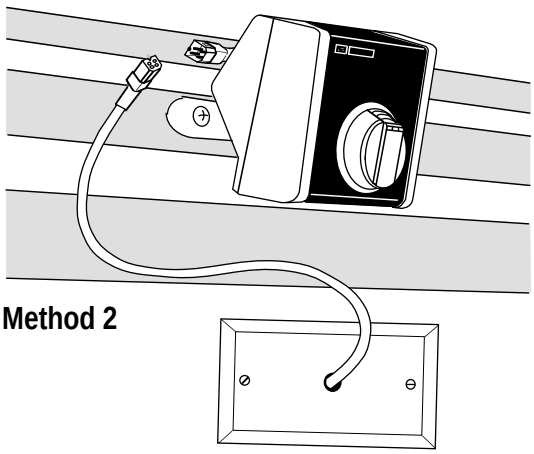

Method 2

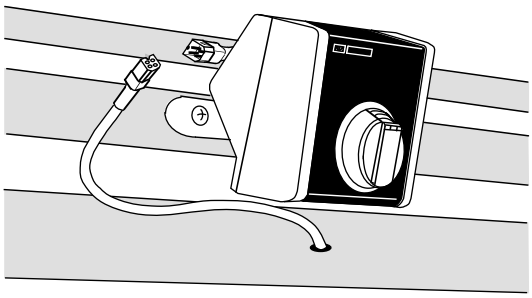

Method 3

Wire information for Command Center

- AWG no. 16 (gauge) flat cable
- Use 6 wire modular connector to plug into power supply (Refer to **Section A**).

Wire information for Power Operators

- Runs less than 50 ft.: AWG no.20 (gauge) 4 wire
- Runs more than 50 ft.: AWG no. 16 (gauge) 4 wire

Method 1

- Run wires through surface mounted wire moldings along walls and ceilings.

Method 2

- Install electrical box near power operator.

  Run wires between studs and rafters, concealed behind wall surfacing material.

  Pass custom wires through 3/8" hole in box cover plate. Strip wires, exposing about 1/2", and splice on to four prong receptor from extension cord provided. Also splice four prong plug from extension cord provided onto power supply end of custom wire.

NOTICE

Splice with wire nuts, crimp connectors, or twisted and soldered joint. Insulate splice with electrical tape.

Conceal splices inside box. Protect cord with grommets if metal box covers are used.

Method 3

Drill 3/8" hole through sill extension. Pass custom wire through hole, extending 4" to 6" above sill.

Strip wires exposing about 1/2", and splice on to four prong receptor from extension cord provided. Also splice four prong plug from extension cord provided onto power supply end of custom wire.