E-SERIES 3 1/2" INSWING FRENCH DOOR VERTICAL FACTORY MULLS

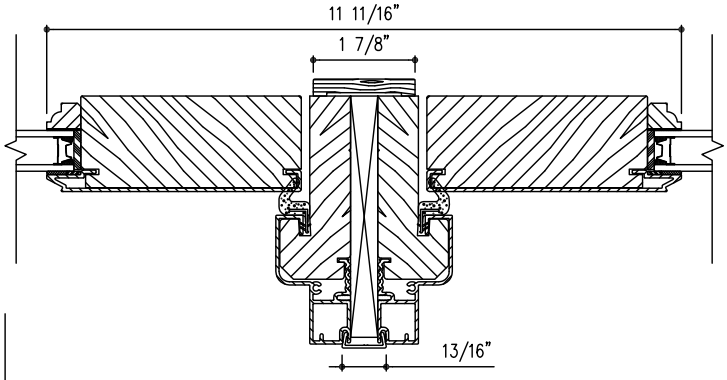

1/2" MULL

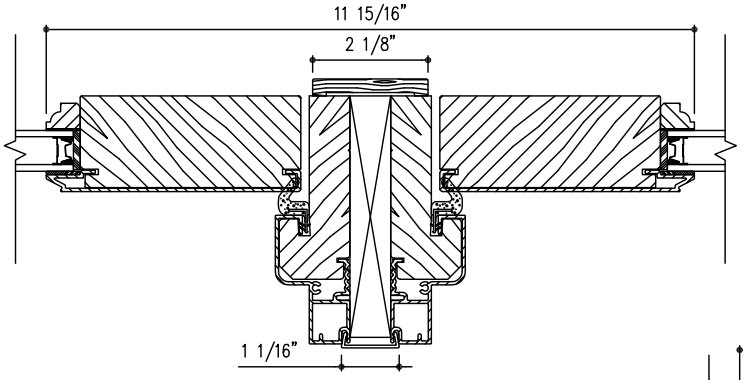

3/4" MULL

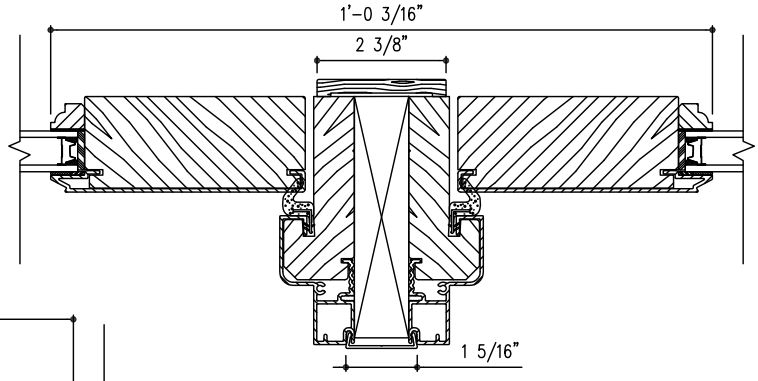

1" MULL

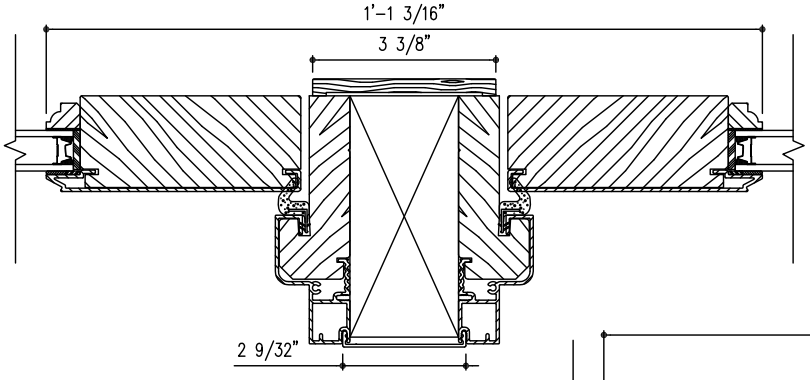

2" MULL

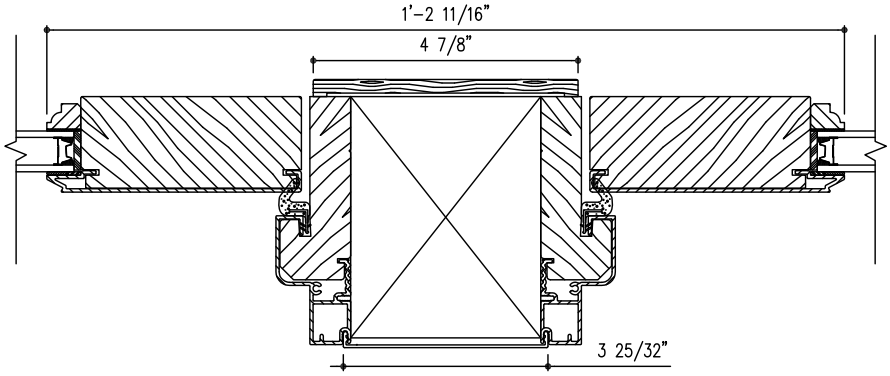

3 1/2" MULL

DWG: AD3317
Page: 01 of 06

PDF file not to scale.
Andersen reserves the right to change the specifications without notice.

Andersen WINDOWS • DOORS

E-SERIES 3 1/2" INSWING FRENCH DOOR HORIZONTAL FACTORY MULLS

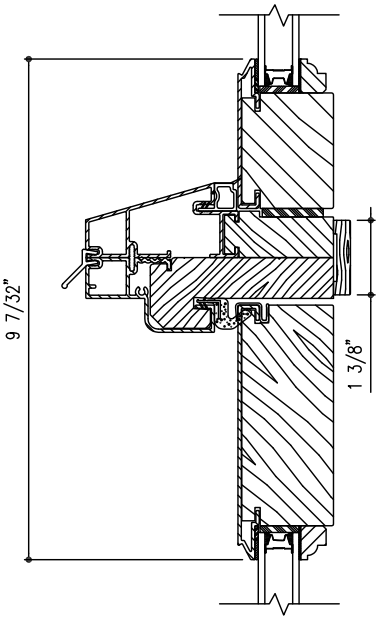

DRIP MULL

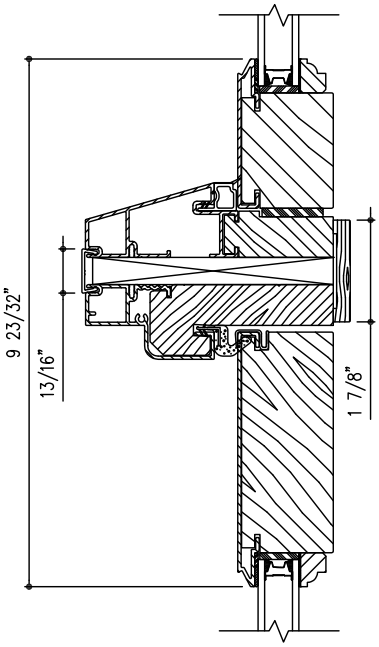

1/2" MULL

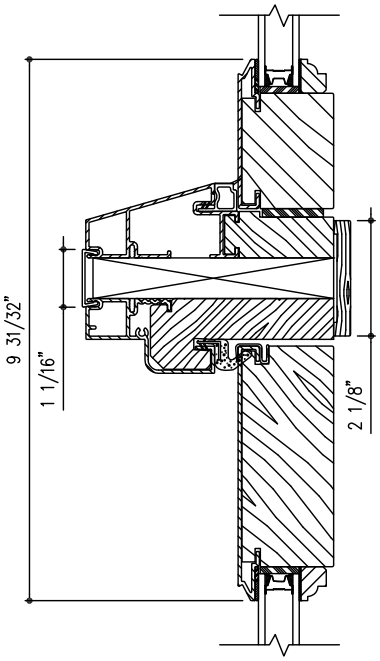

3/4" MULL

DWG: AD3317
Page: 02 of 06

PDF file not to scale.
Andersen reserves the right to change the specifications without notice.

Andersen WINDOWS • DOORS

E-SERIES 3 1/2" INSWING FRENCH DOOR HORIZONTAL FACTORY MULLS

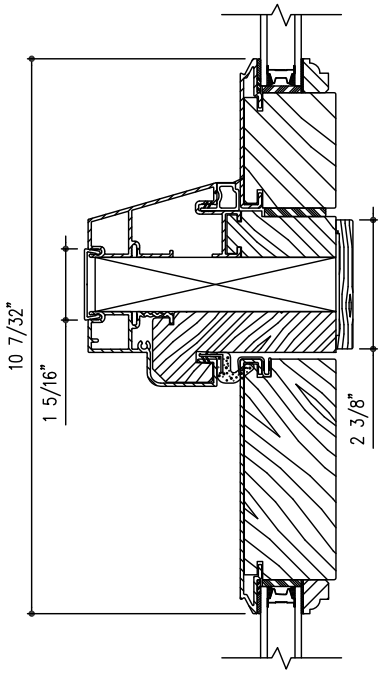

1" MULL

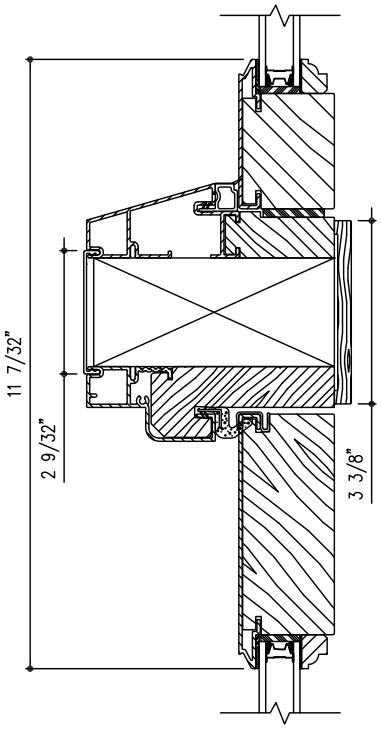

2" MULL

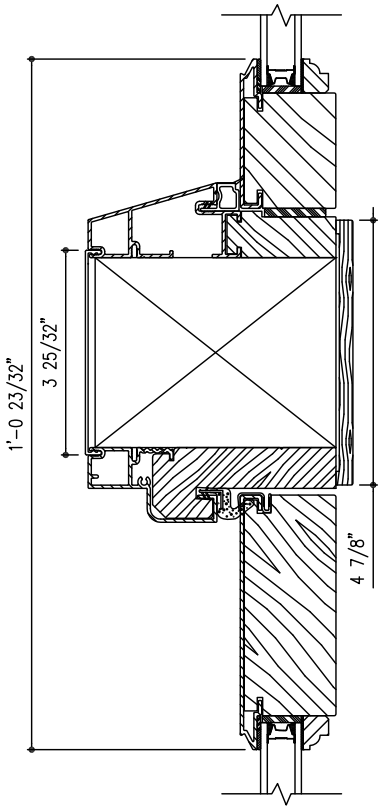

3 1/2" MULL

DWG: AD3317
Page: 03 of 06

PDF file not to scale.
Andersen reserves the right to change the specifications without notice.

Andersen WINDOWS • DOORS

E-SERIES 3 1/2" INSWING FRENCH DOOR COMBINATION MULLS

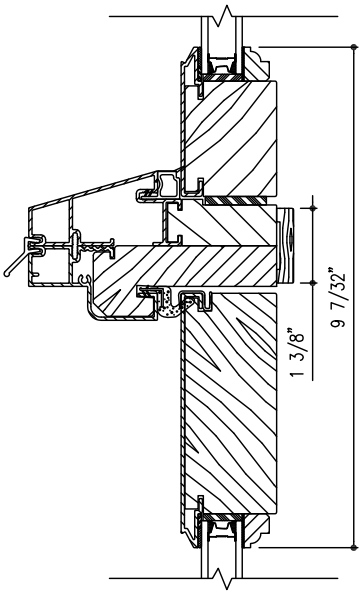

INSWING
TRANSOM OVER
INSWING DOOR

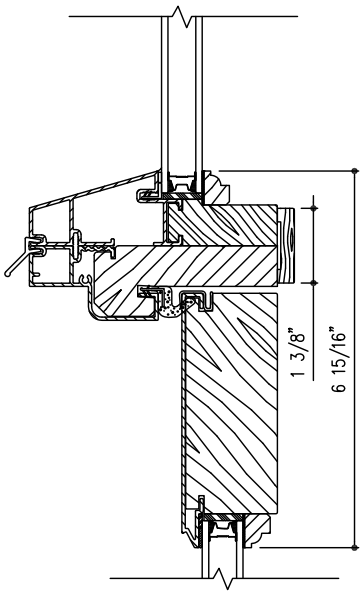

DIRECT GLAZED
TRANSOM OVER
INSWING DOOR

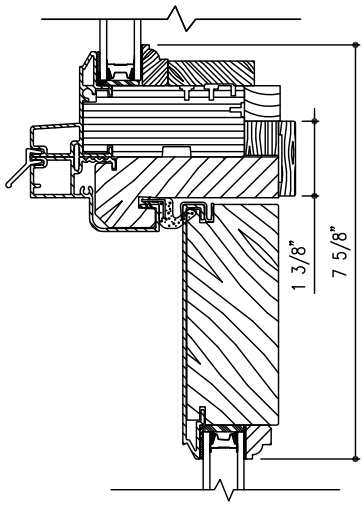

AUXILIARY OVER
INSWING DOOR

DWG: AD3317
Page: 04 of 06

PDF file not to scale.
Andersen reserves the right to change the specifications without notice.

Andersen WINDOWS • DOORS

E-SERIES 3 1/2" INSWING FRENCH DOOR REINFORCED VERTICAL FIELD MULLS

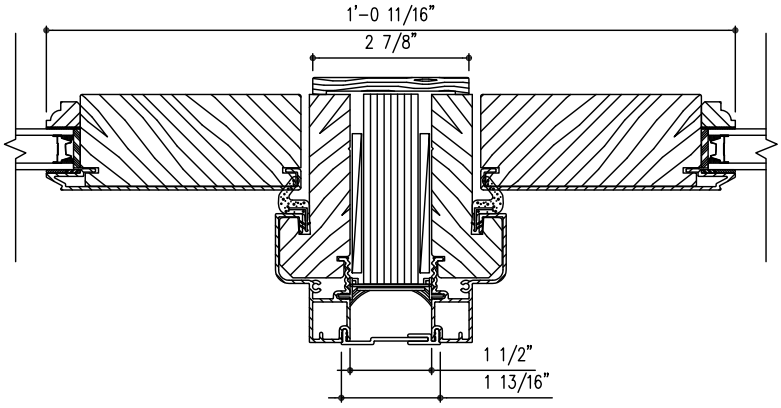

1" x 3 1/2" LVL MULL

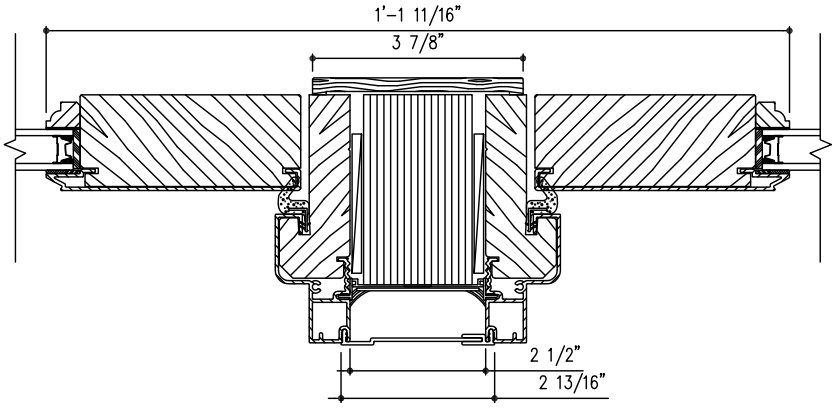

2" x 3 1/2" LVL MULL

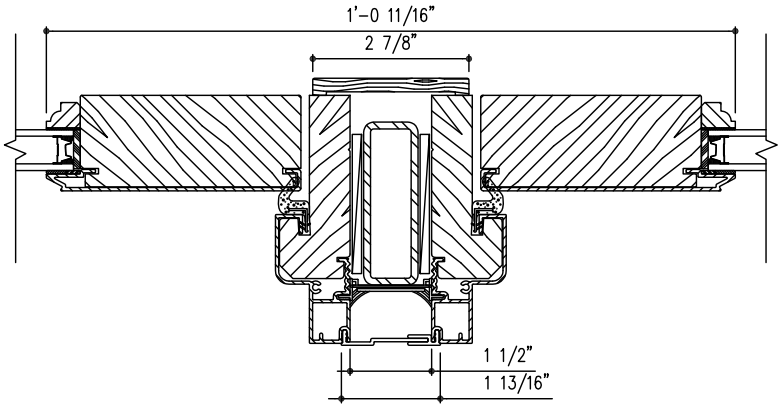

1" x 3" TUBE STEEL MULL

DWG: AD3317
Page: 05 of 06

PDF file not to scale.
Andersen reserves the right to change the specifications without notice.

Andersen WINDOWS • DOORS

E-SERIES 3 1/2" INSWING FRENCH DOOR FIELD SPREAD MULLS

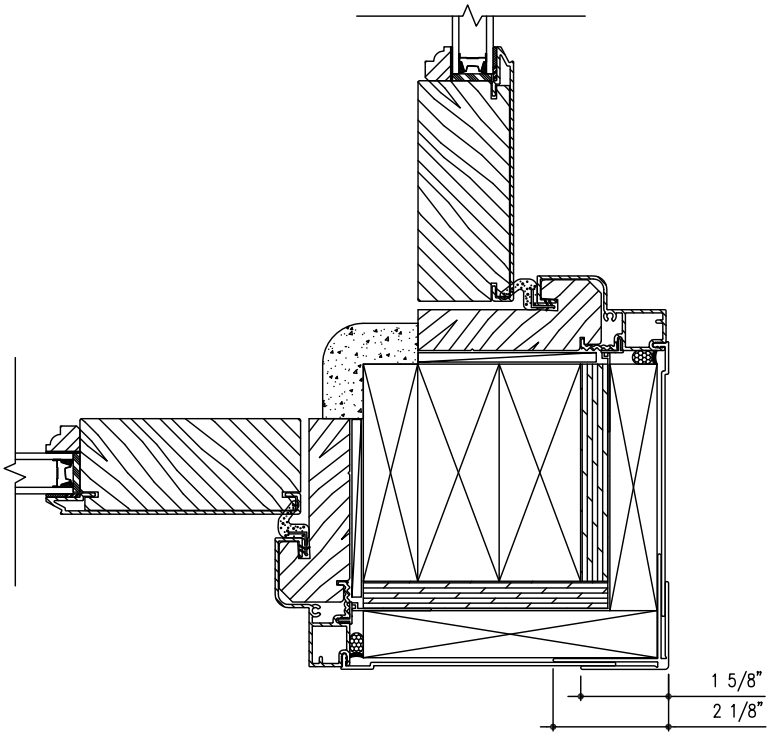

CORNER MULL

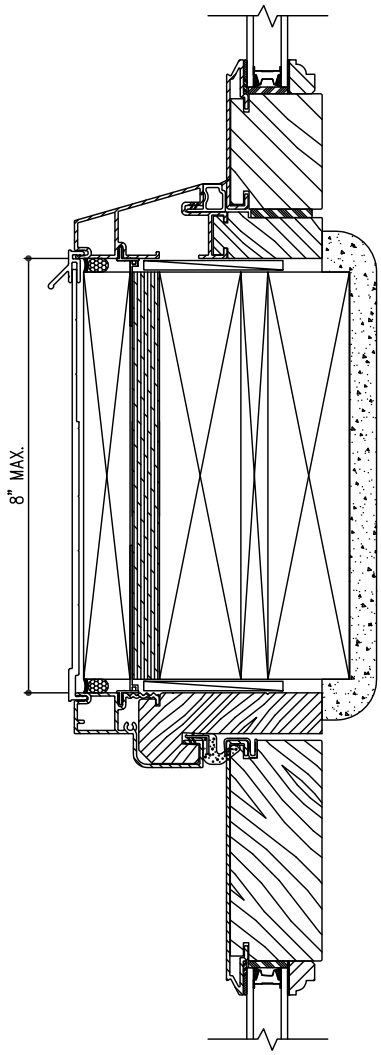

TWO PIECE
MULL COVER

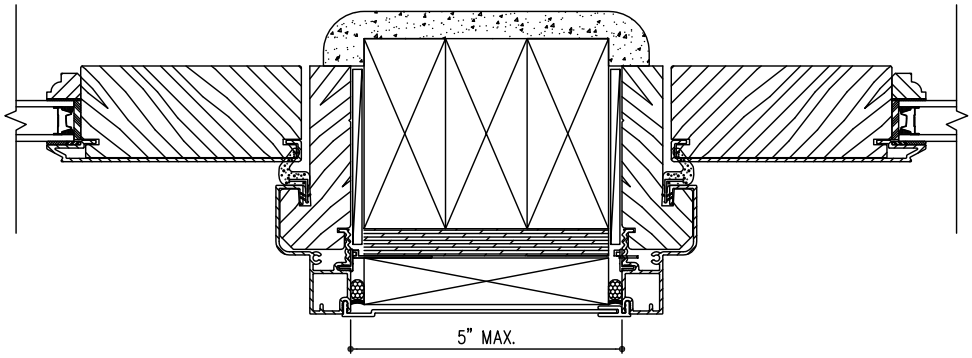

TWO PIECE
MULL COVER

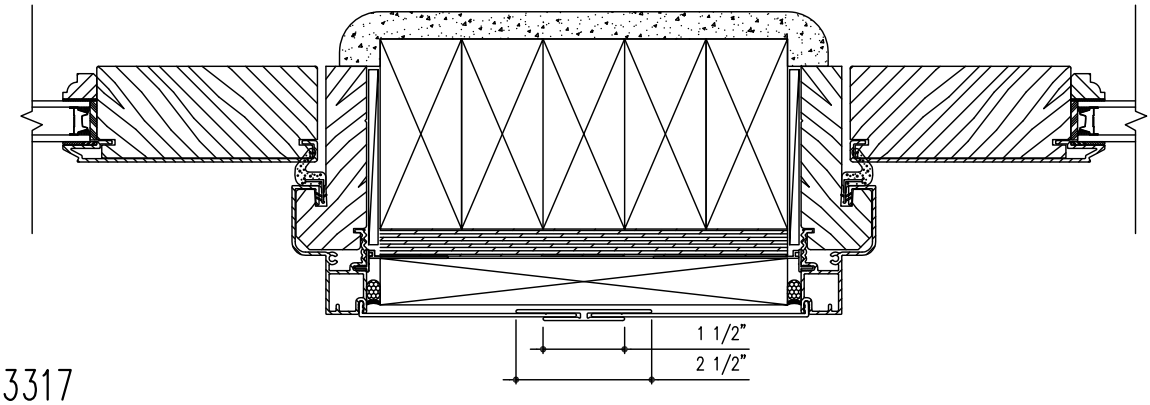

THREE PIECE
MULL COVER

DWG: AD3317
Page: 06 of 06

PDF file not to scale.
Andersen reserves the right to change the specifications without notice.

Andersen WINDOWS • DOORS