E-SERIES GLIDING DOOR
VERTICAL FACTORY MULLS

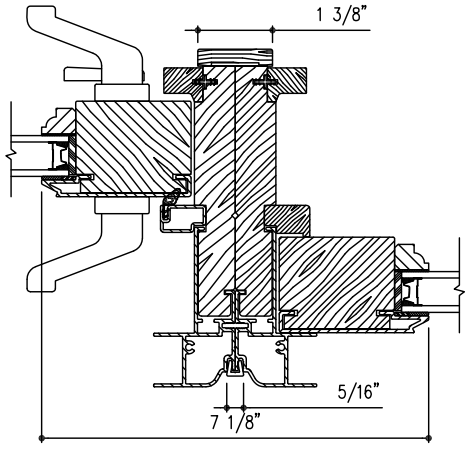

ZERO MULL

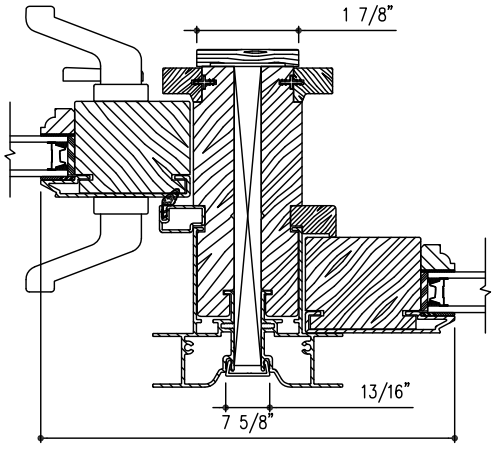

1/2" MULL

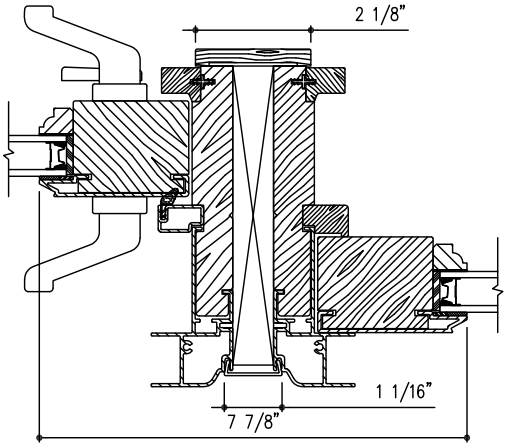

3/4" MULL

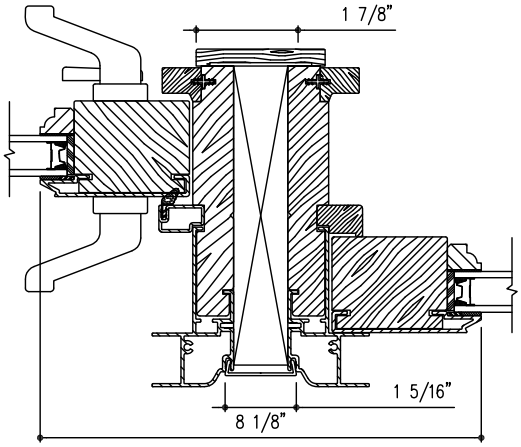

1" MULL

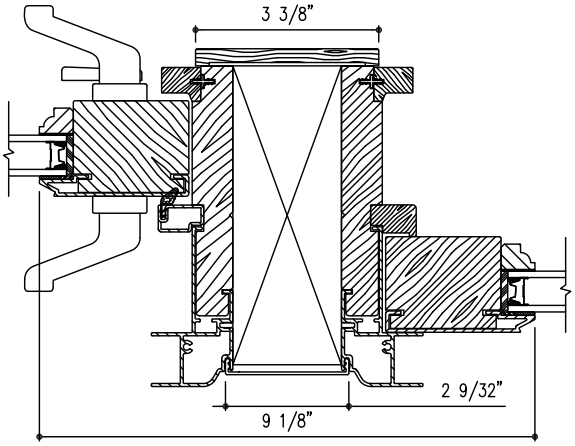

2" MULL

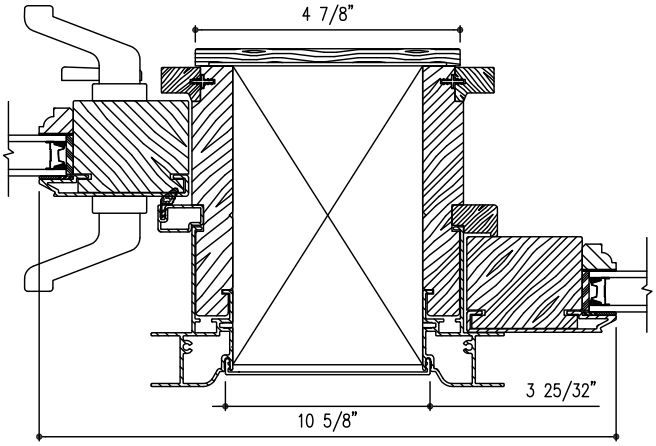

3 1/2" MULL

DWG: AD3329
Page: 01 of 06

PDF file not to scale.
Andersen reserves the right to change the specifications without notice.

E-SERIES GLIDING DOOR
HORIZONTAL FACTORY MULLS

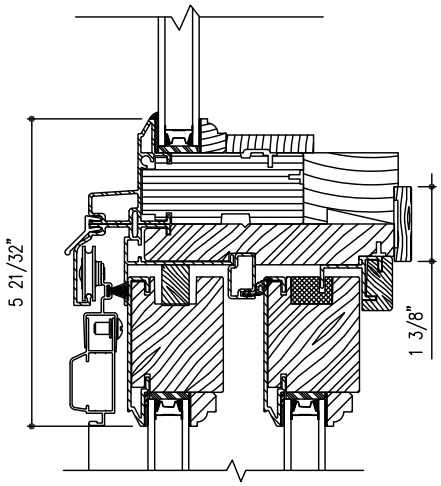

DRIP MULL

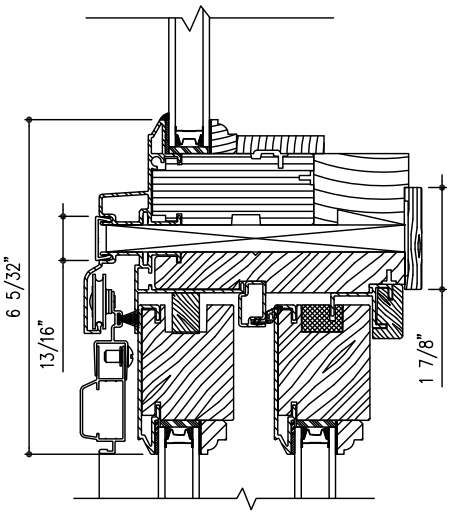

1/2" MULL

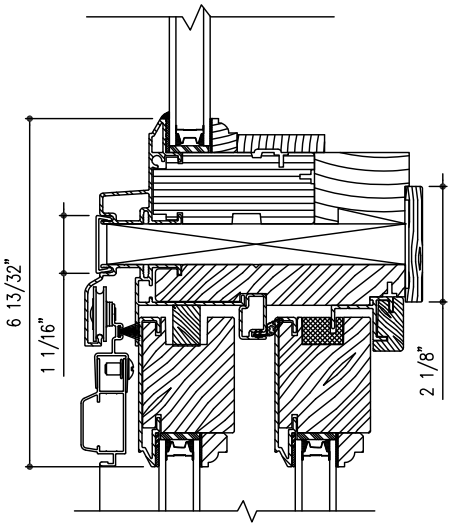

3/4" MULL

DWG: AD3329
Page: 02 of 06

PDF file not to scale.
Andersen reserves the right to change the specifications without notice.

E-SERIES GLIDING DOOR
HORIZONTAL FACTORY MULLS

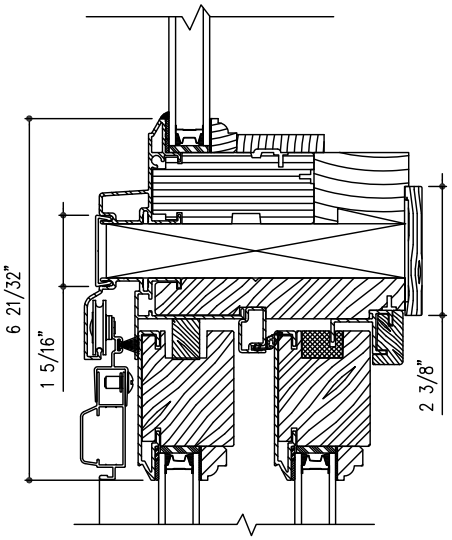

1" MULL

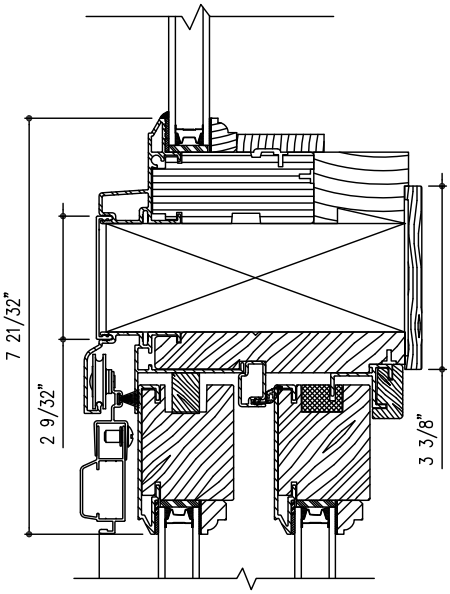

2" MULL

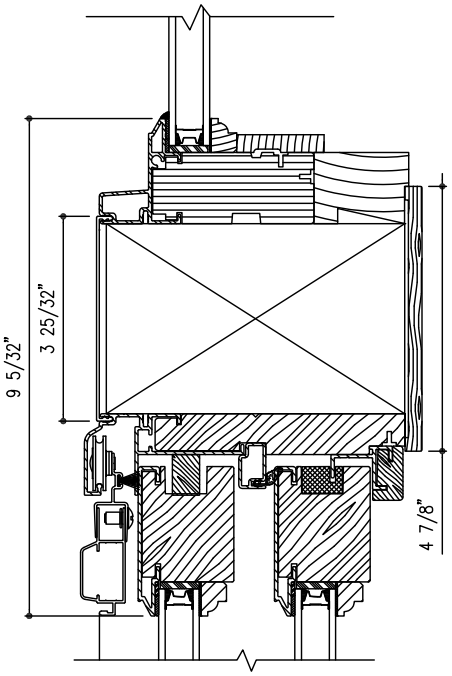

3 1/2" MULL

PDF file not to scale.
Andersen reserves the right to change the specifications without notice.

E-SERIES GLIDING DOOR
REINFORCED VERTICAL FIELD MULLS

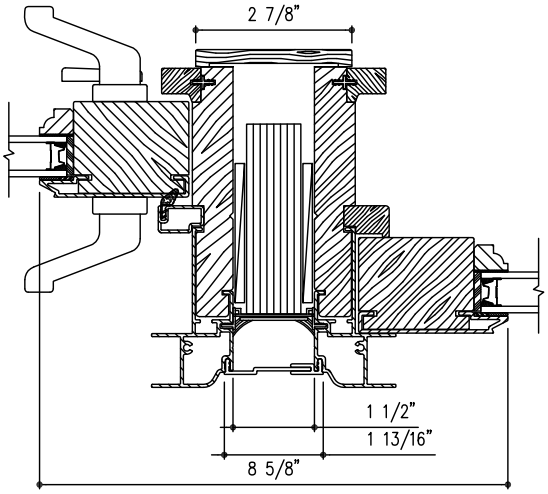

1" x 3 1/2" LVL
MULL

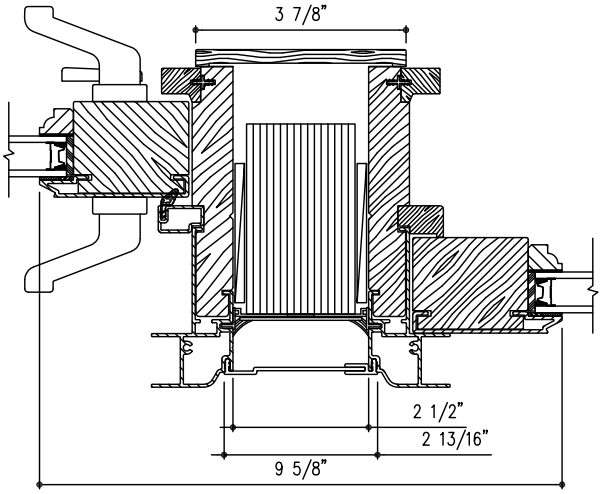

2" x 3 1/2" LVL
MULL

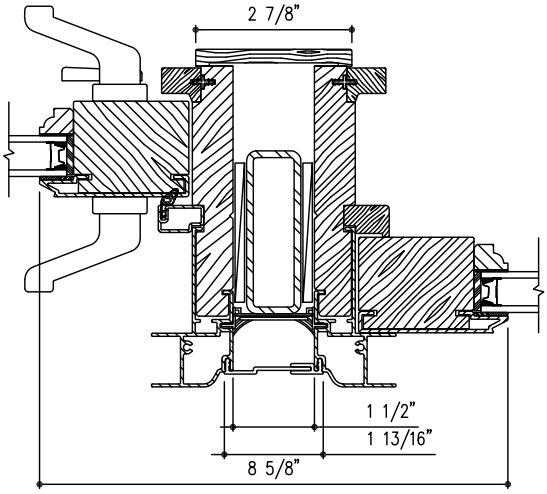

1" x 3" TUBE
STEEL MULL

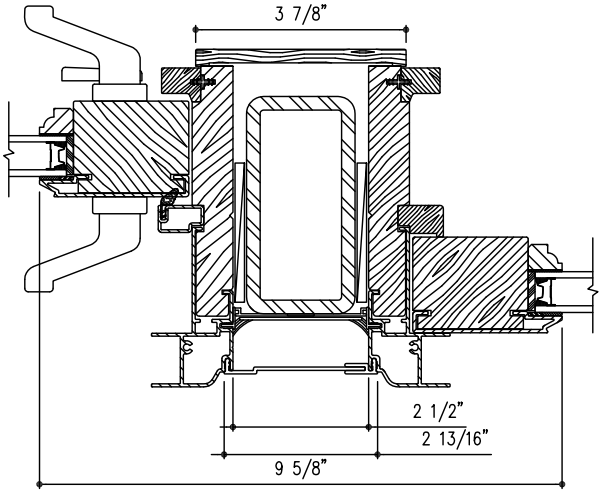

2" x 4" TUBE
STEEL MULL

PDF file not to scale.
Andersen reserves the right to change the specifications without notice.

E-SERIES GLIDING DOOR
HORIZONTAL REINFORCED FIELD MULLS

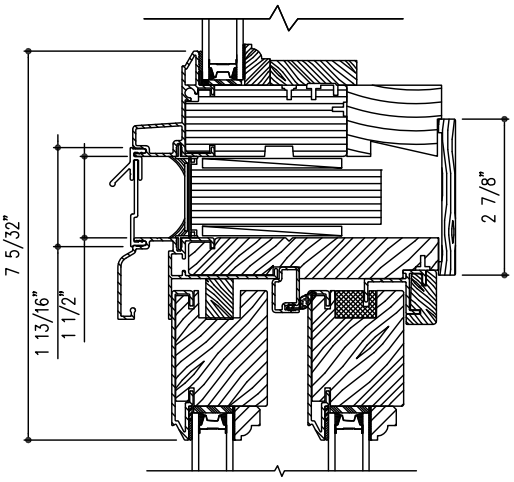

1" x 3 1/2" LVL
MULL

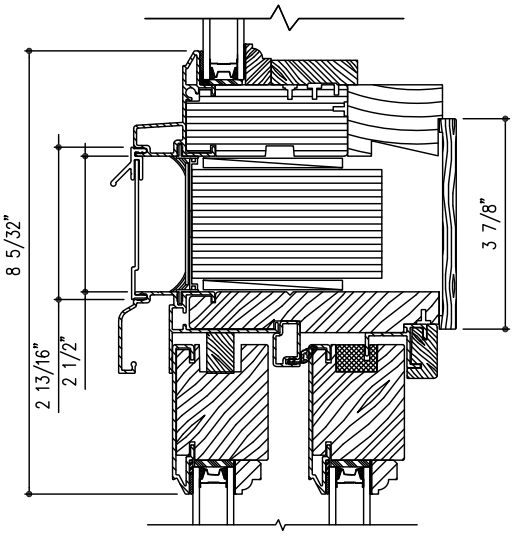

2" x 3 1/2" LVL
MULL

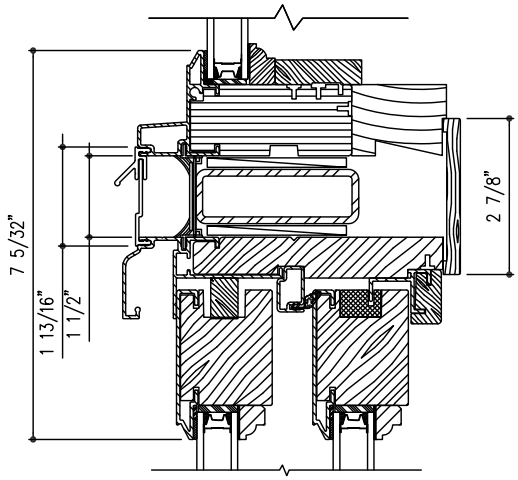

1" x 3" TUBE
STEEL MULL

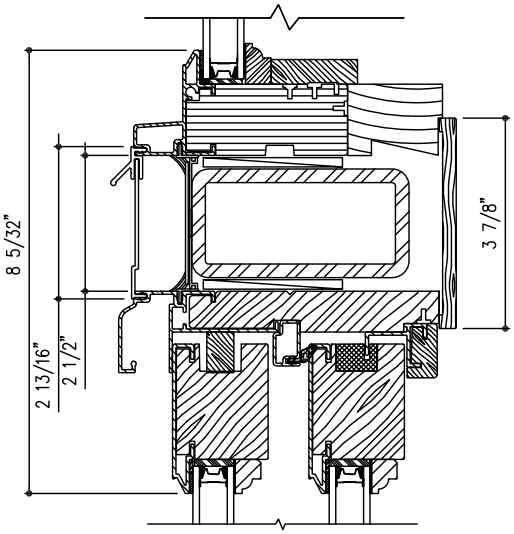

2" x 4" TUBE
STEEL MULL

PDF file not to scale.
Andersen reserves the right to change the specifications without notice.

E-SERIES GLIDING DOOR
FIELD SPREAD MULLS

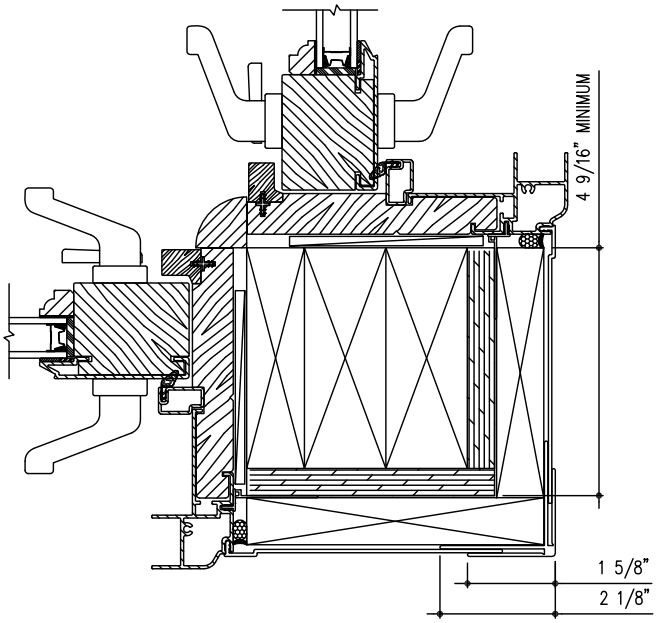

CORNER MULL

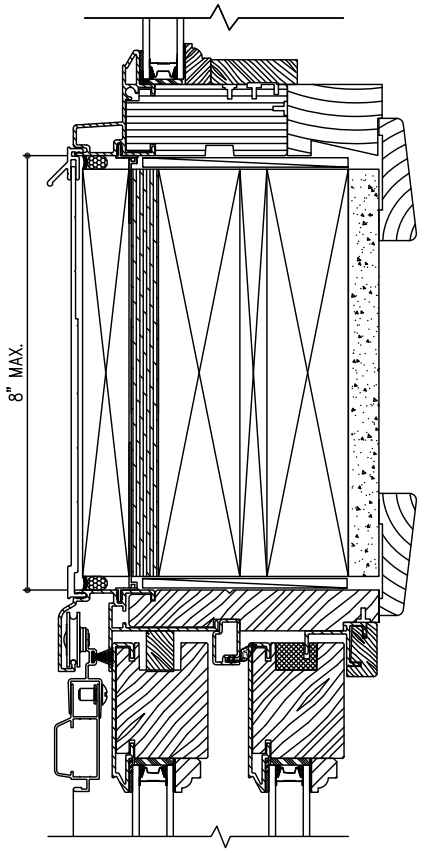

TWO PIECE
MULL COVER

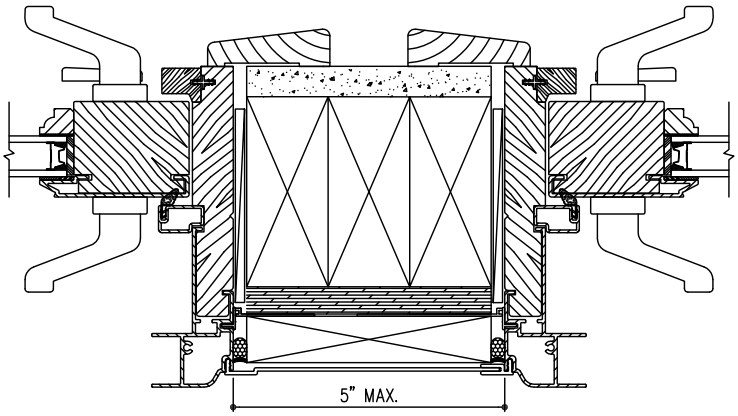

TWO PIECE MULL COVER

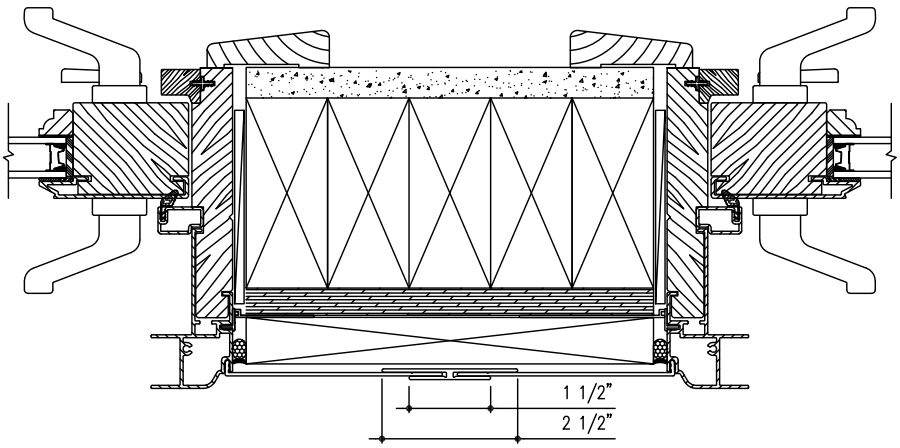

THREE PIECE MULL COVER

DWG: AD3329
Page: 06 of 06

PDF file not to scale.
Andersen reserves the right to change the specifications without notice.

Andersen WINDOWS • DOORS