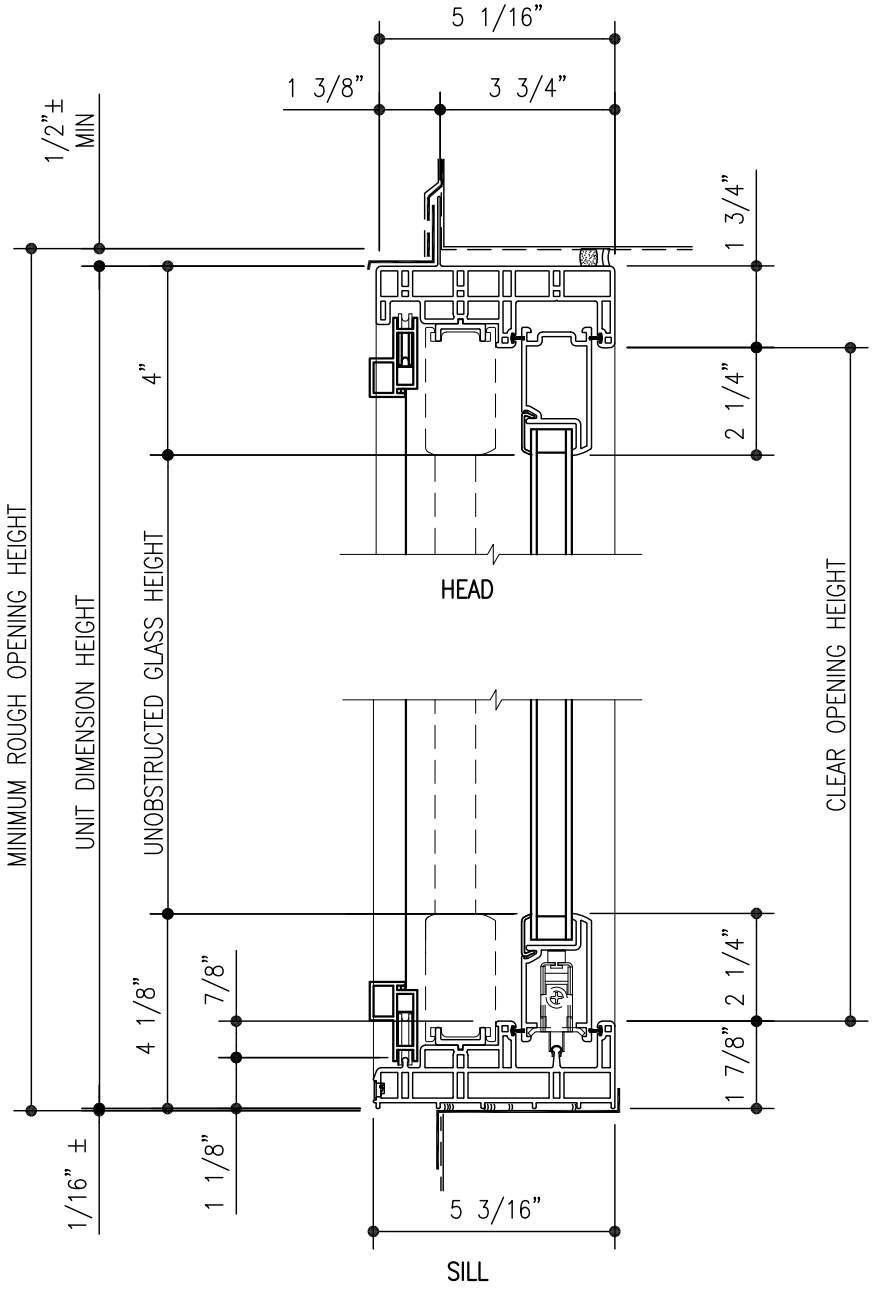

100 SERIES GLIDING PATIO DOOR VERTICAL SECTION

SCALE: 3" = 1'-0"

8/28/12

Andersen WINDOWS • DOORS
Andersen Windows, Inc.
100 Fourth Avenue North
Bayport, Minnesota 55003

GLIDING PATIO DOOR

100 SERIES

F1

OF 4

8/28/12

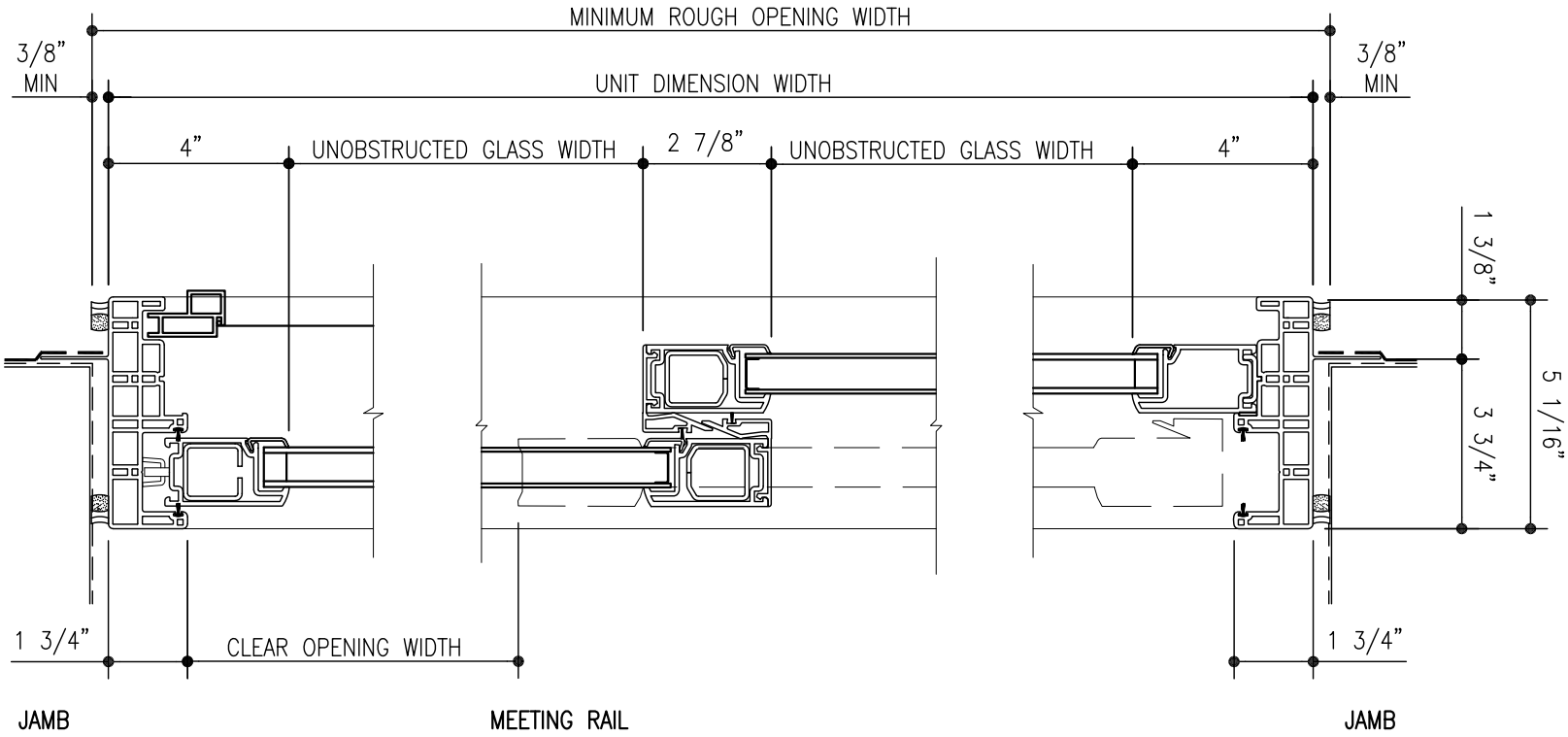

100 SERIES GLIDING PATIO DOOR HORIZONTAL SECTION

SCALE: 3" = 1'-0"

100 SERIES
F2
OF 4

GLIDING PATIO DOOR

Andersen. WINDOWS • DOORS
Andersen Windows, Inc.
100 Fourth Avenue North
Bayport, Minnesota 55003

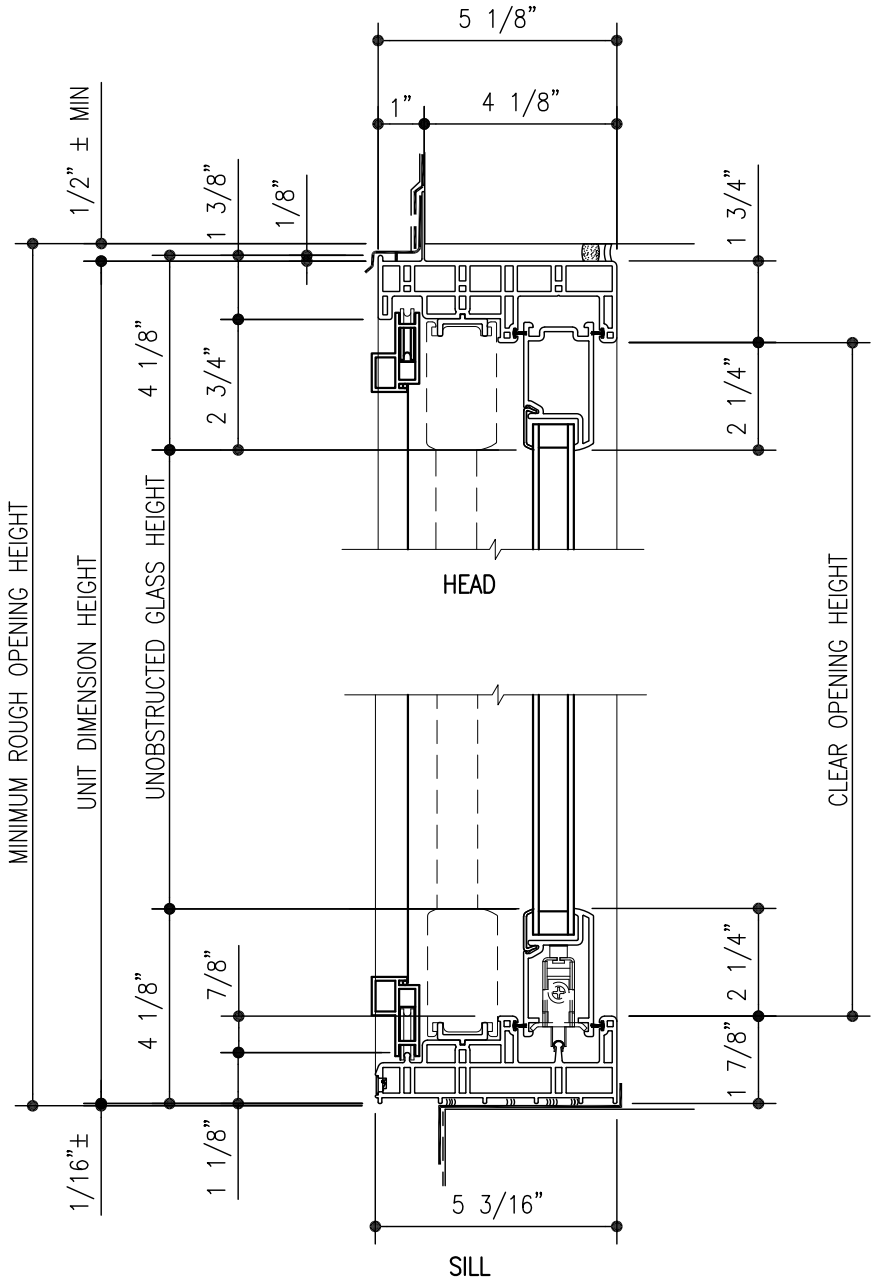

100 SERIES GLIDING PATIO DOOR VERTICAL SECTION

SCALE: 3" = 1'-0"

STUCCO KEY

8/28/12

STUCCO KEY

GLIDING PATIO DOOR

100 SERIES

F3

OF 4

Andersen WINDOWS • DOORS
Andersen Windows, Inc.
100 Fourth Avenue North
Bayport, Minnesota 55003

8/28/12

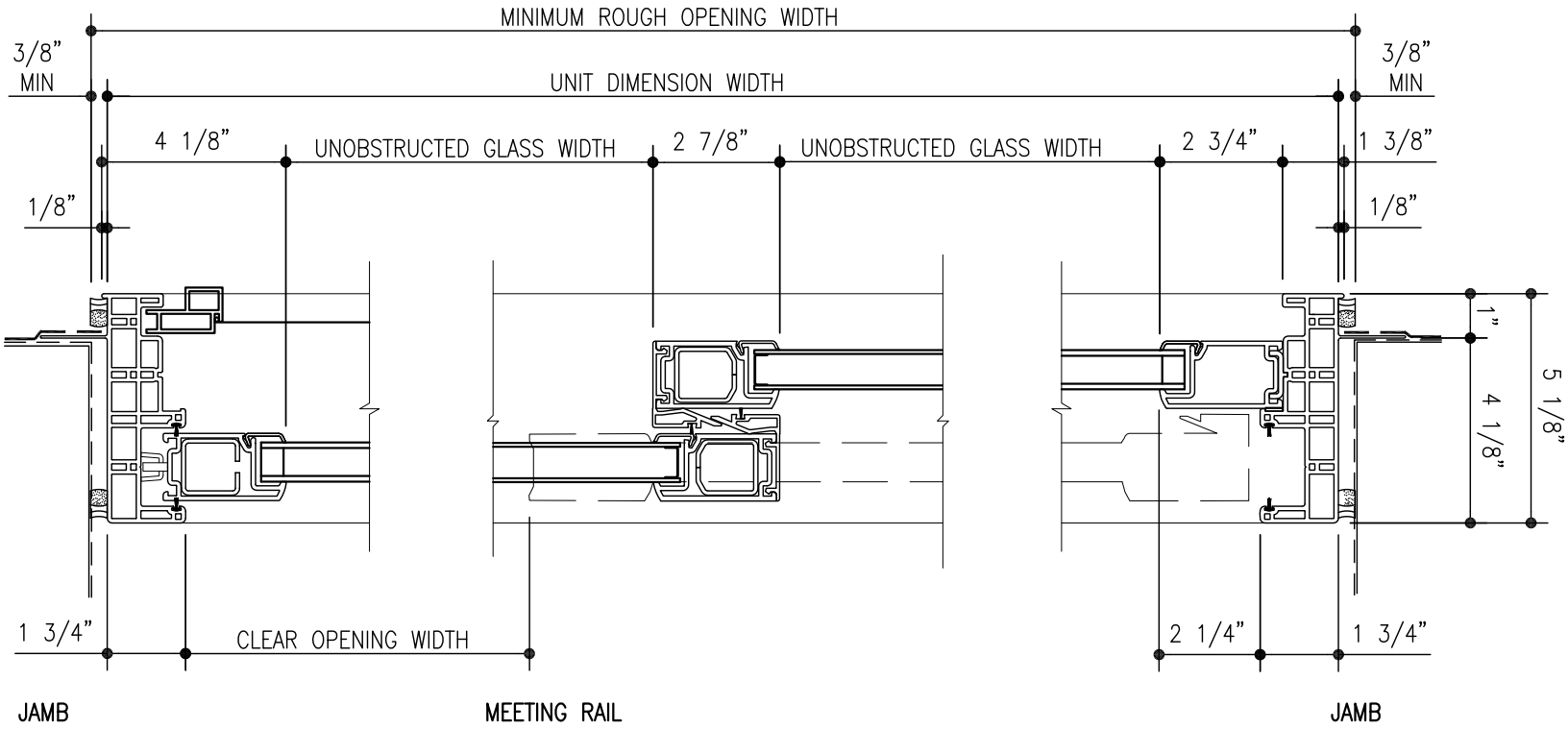

100 SERIES GLIDING PATIO DOOR HORIZONTAL SECTION

SCALE: 3" = 1'-0"

STUCCO KEY

100 SERIES
F4
OF 4

STUCCO KEY

GLIDING PATIO DOOR

Andersen. WINDOWS • DOORS
Andersen Windows, Inc.
100 Fourth Avenue North
Bayport, Minnesota 55003

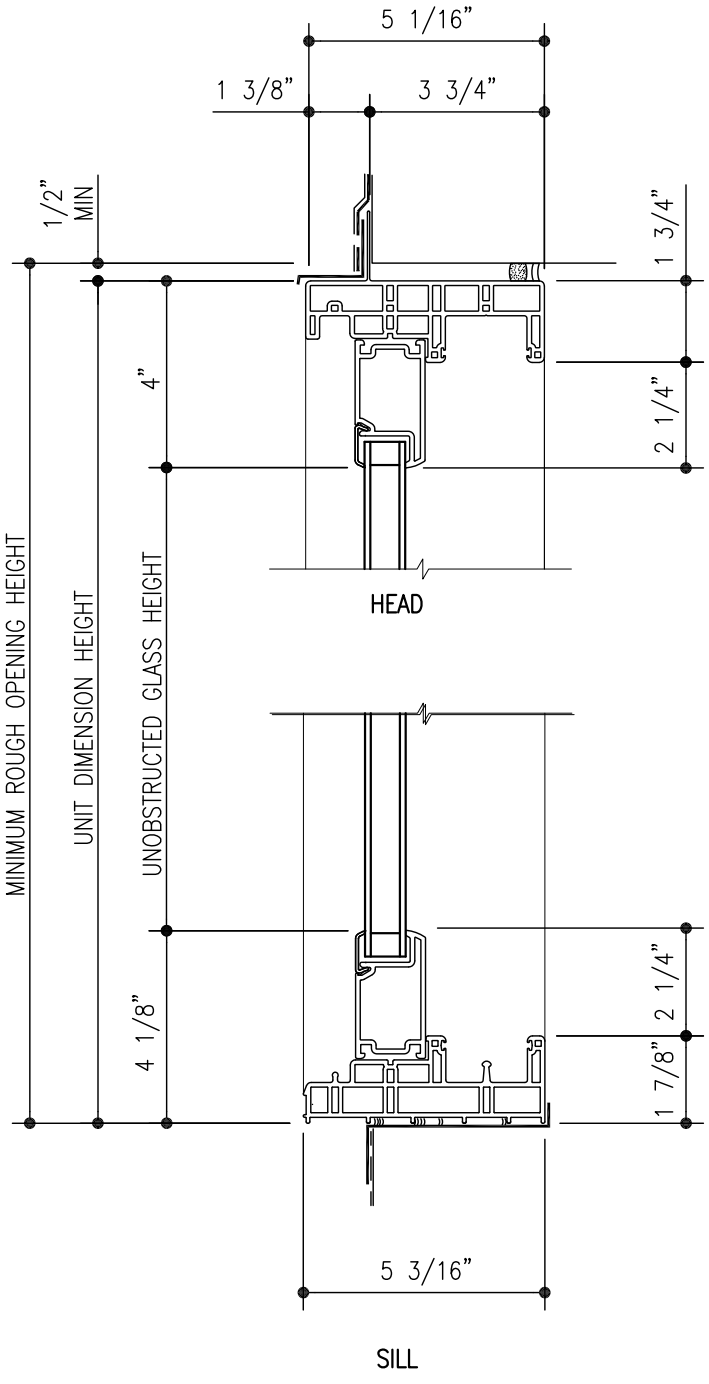

100 SERIES GLIDING PATIO DOOR SIDELIGHT VERTICAL SECTION

SCALE: 3" = 1'-0"

8/29/12

Andersen WINDOWS • DOORS
Andersen Windows, Inc.
100 Fourth Avenue North
Bayport, Minnesota 55003

GLIDING DOOR SIDELIGHT

100 SERIES

G1

8/29/12

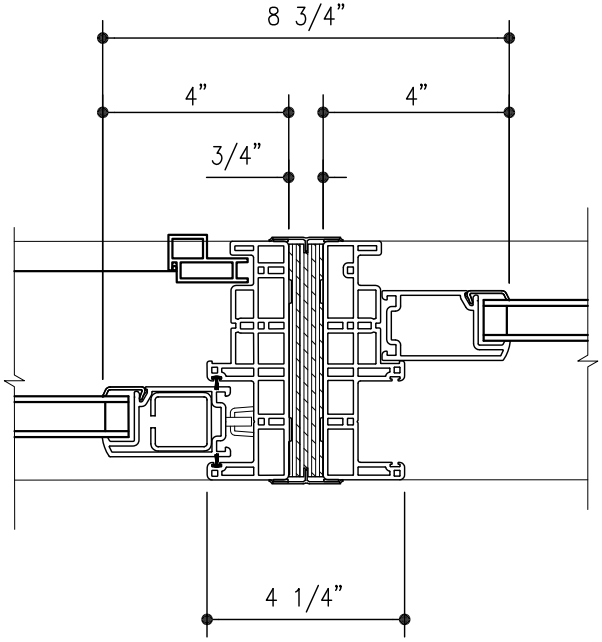

DOOR SIDELIGHT

100 SERIES GLIDING PATIO DOOR/SIDELGIHT MULLION

SCALE: 3" = 1'-0"

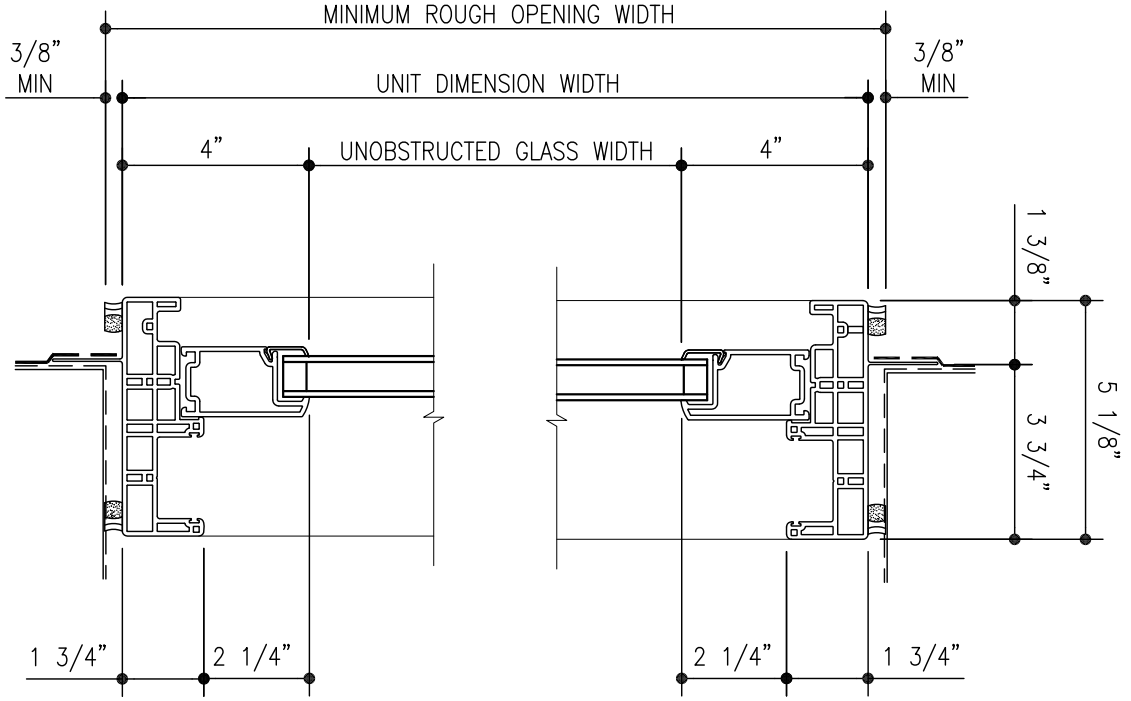

JAMB JAMB

100 SERIES GLIDING PATIO DOOR SIDELGIHT HORIZONTAL SECTION

SCALE: 3" = 1'-0"

100 SERIES G2 OF 4

GLIDING DOOR SIDELIGHT

Andersen. WINDOWS • DOORS
Andersen Windows, Inc.
100 Fourth Avenue North
Bayport, Minnesota 55003

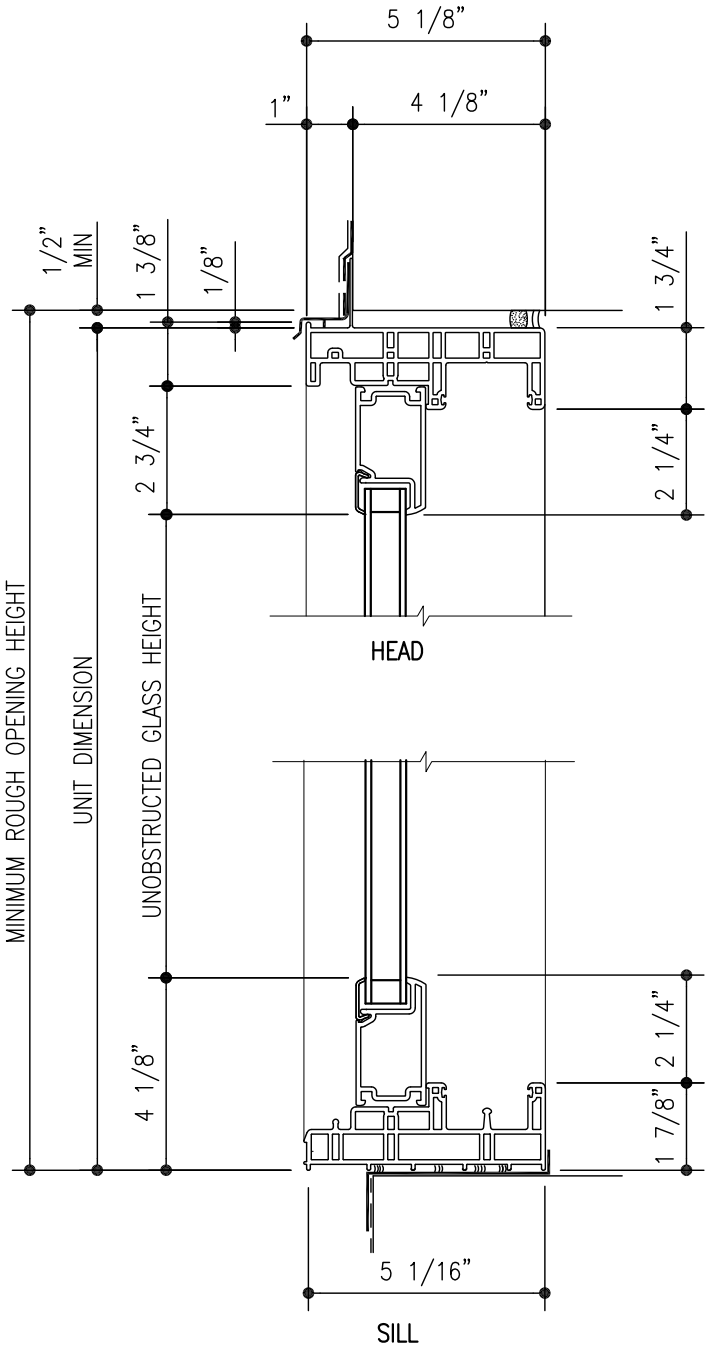

100 SERIES GLIDING PATIO DOOR SIDELIGHT VERTICAL SECTION

SCALE: 3" = 1'-0"

STUCCO KEY

8/29/12

Andersen WINDOWS • DOORS
Andersen Windows, Inc.
100 Fourth Avenue North
Bayport, Minnesota 55003

STUCCO KEY
GLIDING DOOR SIDELIGHT

100 SERIES

G3

OF 4

8/29/12

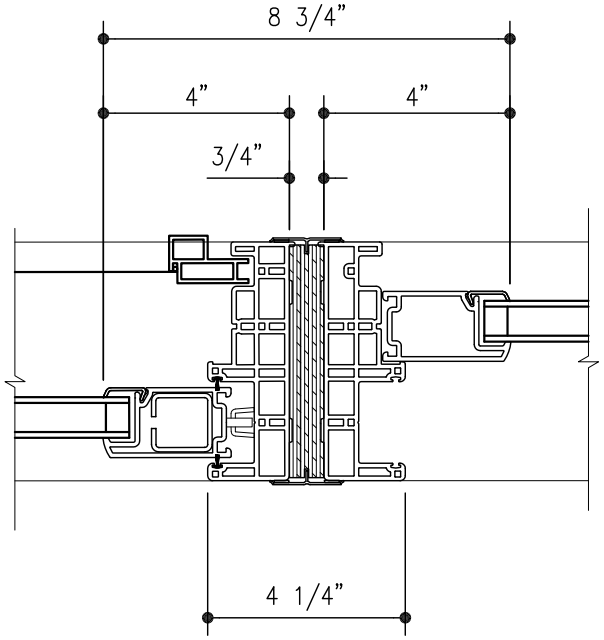

DOOR SIDELIGHT

100 SERIES GLIDING PATIO DOOR/SIDELGIHT MULLION

SCALE: 3" = 1'-0" STUCCO KEY

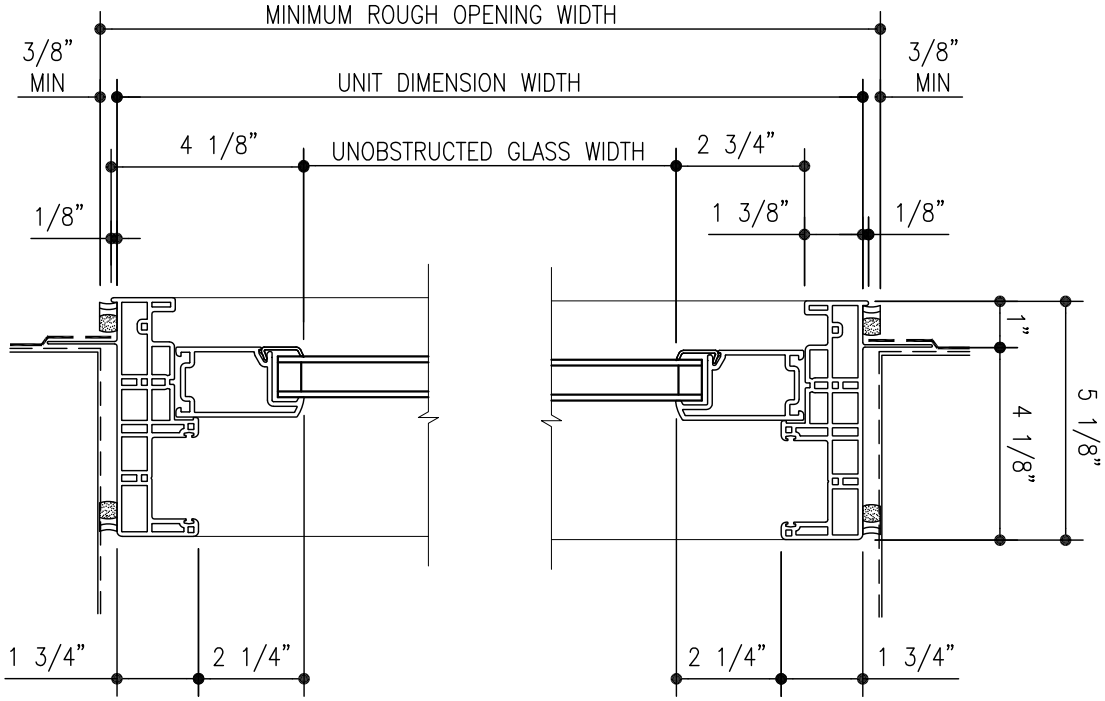

JAMB JAMB

100 SERIES GLIDING PATIO DOOR SIDELGIHT HORIZONTAL SECTION

SCALE: 3" = 1'-0" STUCCO KEY

G4 100 SERIES 4 OF 4

STUCCO KEY GLIDING DOOR SIDELIGHT

Andersen. WINDOWS • DOORS
Andersen Windows, Inc.
100 Fourth Avenue North
Bayport, Minnesota 55003

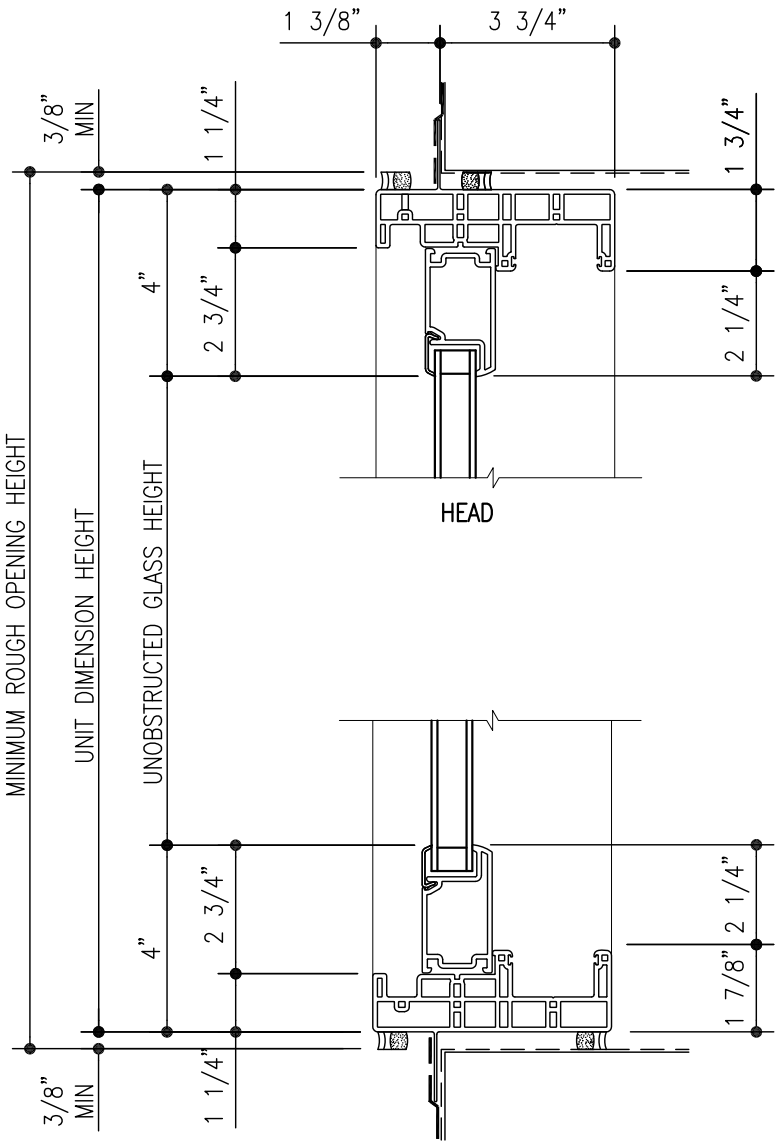

100 SERIES GLIDING PATIO DOOR TRANSOM VERTICAL SECTION

SCALE: 3" = 1'-0"

8/29/12

Andersen WINDOWS • DOORS
Andersen Windows, Inc.
100 Fourth Avenue North
Bayport, Minnesota 55003

GLIDING DOOR TRANSOM

100 SERIES

H1

OF 6

8/29/12

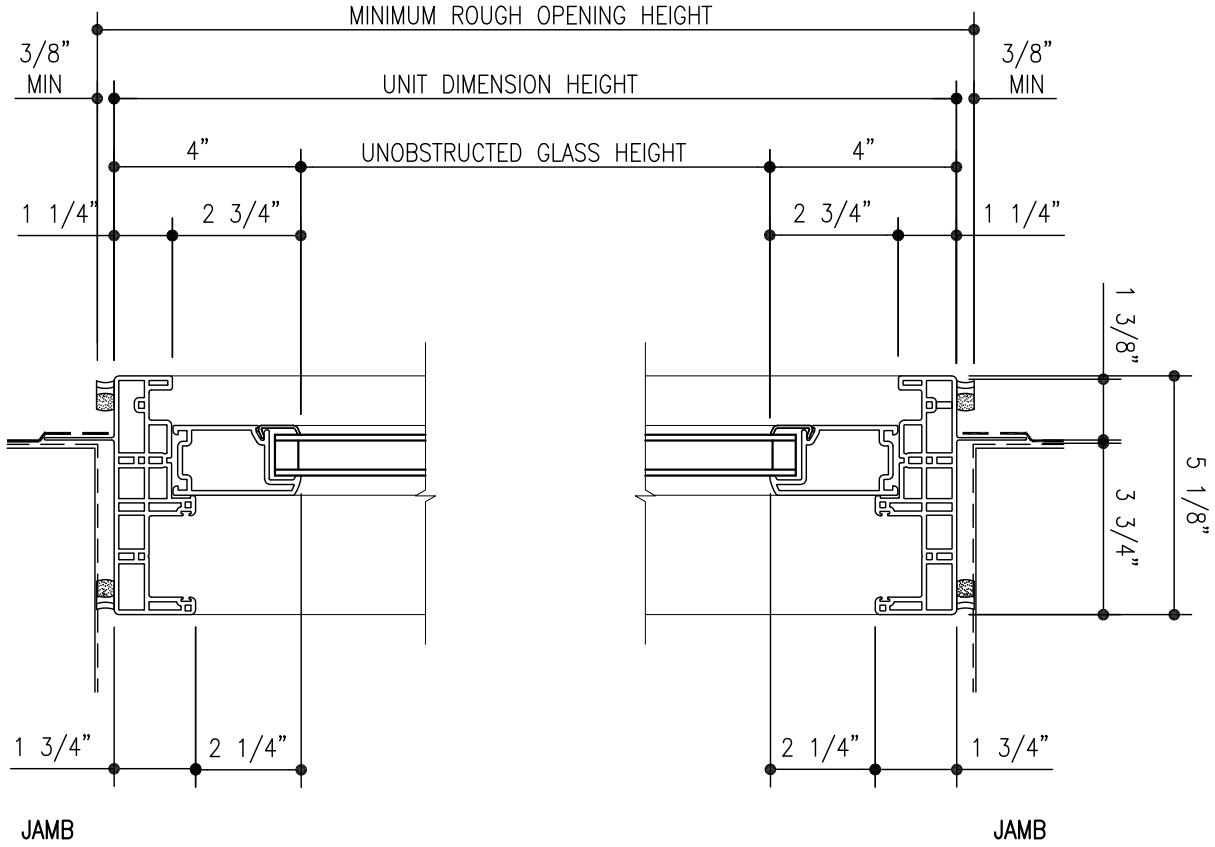

100 SERIES GLIDING DOOR TRANSOM HORIZONTAL SECTION

SCALE: 3" = 1'-0"

100 SERIES
H2
OF 6

GLIDING DOOR TRANSOM

Andersen. WINDOWS • DOORS
Andersen Windows, Inc.
100 Fourth Avenue North
Bayport, Minnesota 55003

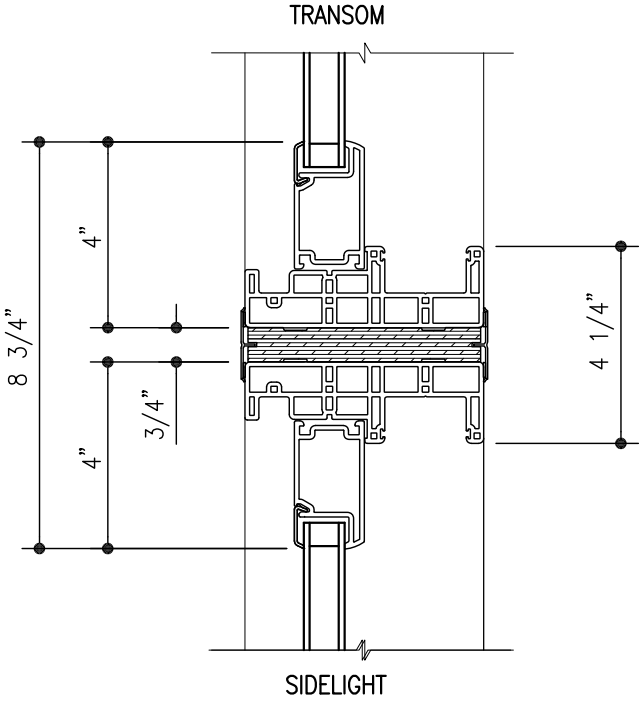

100 SERIES GLIDING SIDELIGHT/TRANSOM MULL

SCALE: 3" = 1'-0"

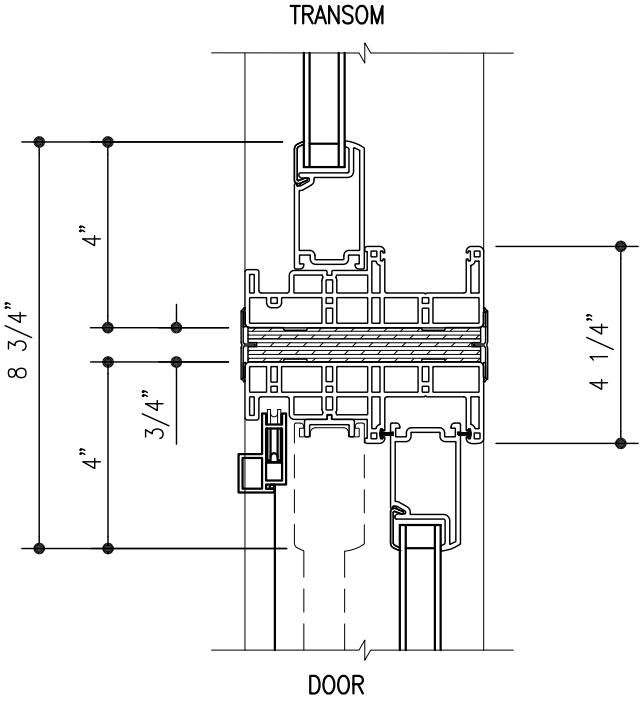

100 SERIES GLIDING DOOR/TRANSOM MULL

SCALE: 3" = 1'-0"

8/29/12

Andersen WINDOWS • DOORS
Andersen Windows, Inc.
100 Fourth Avenue North
Bayport, Minnesota 55003

GLIDING DOOR TRANSOM

100 SERIES

H3

8/29/12

100 SERIES GLIDING PATIO DOOR
TRANSOM VERTICAL SECTION

SCALE: 3" = 1'-0"

STUCCO KEY

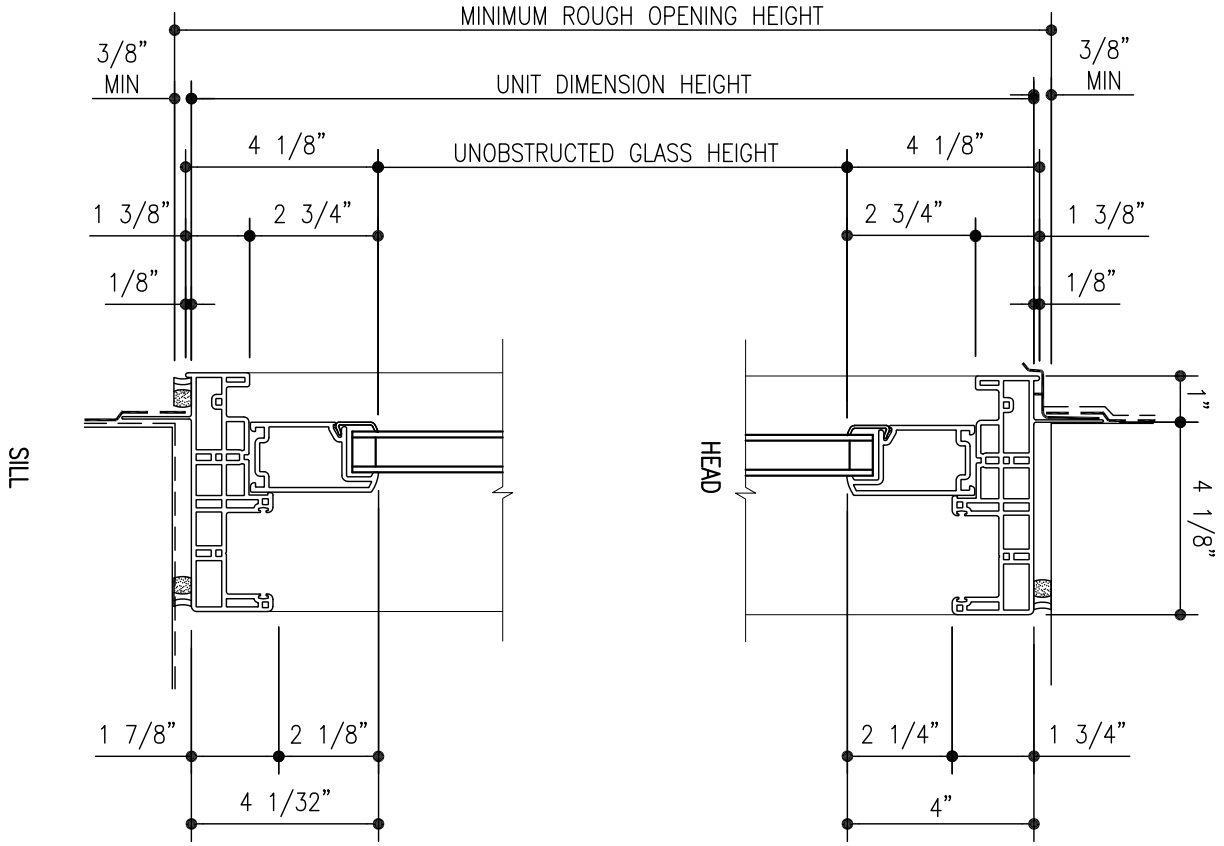

STUCCO KEY

GLIDING DOOR TRANSOM

100 SERIES

H4

OF 6

Andersen. WINDOWS • DOORS
Andersen Windows, Inc.
100 Fourth Avenue North
Bayport, Minnesota 55003

8/29/12

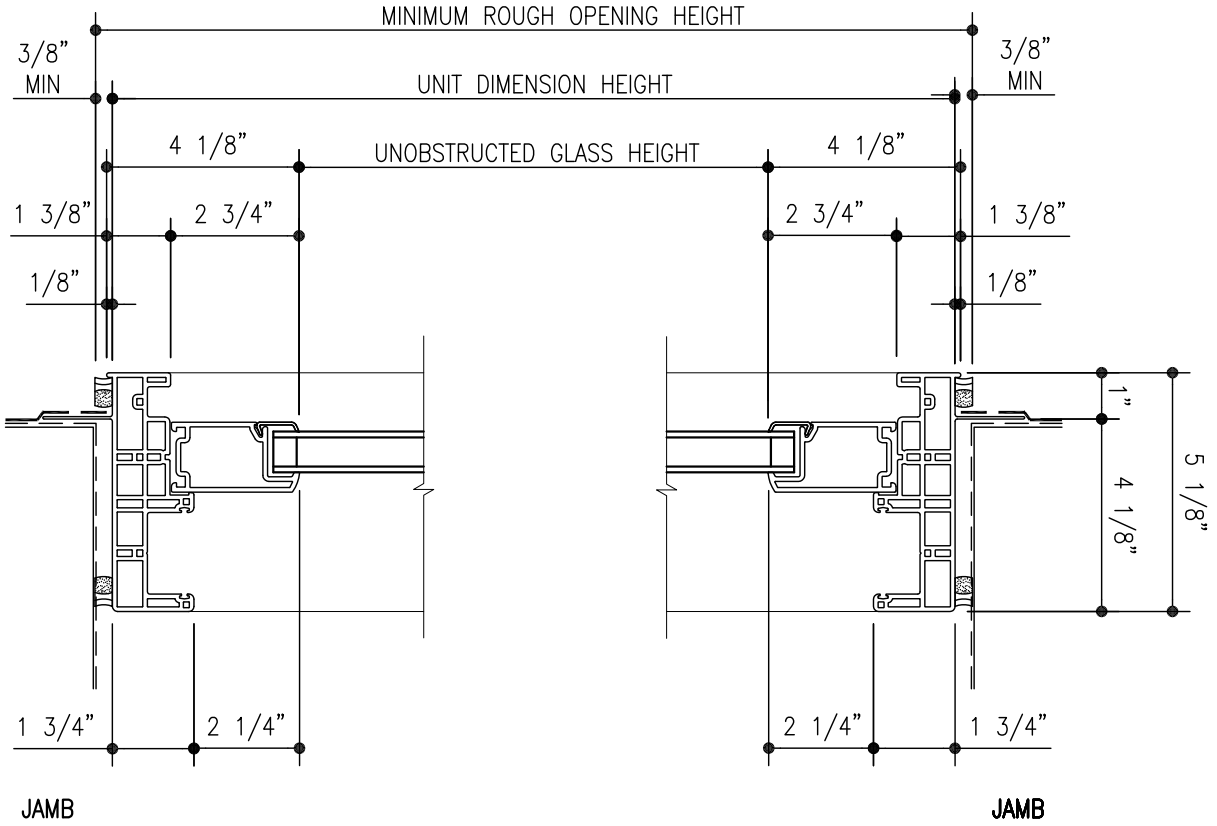

100 SERIES GLIDING DOOR TRANSOM HORIZONTAL SECTION

SCALE: 3" = 1'-0"

STUCCO KEY

H5

100 SERIES

OF 6

STUCCO KEY

GLIDING DOOR TRANSOM

Andersen. WINDOWS • DOORS
Andersen Windows, Inc.
100 Fourth Avenue North
Bayport, Minnesota 55003

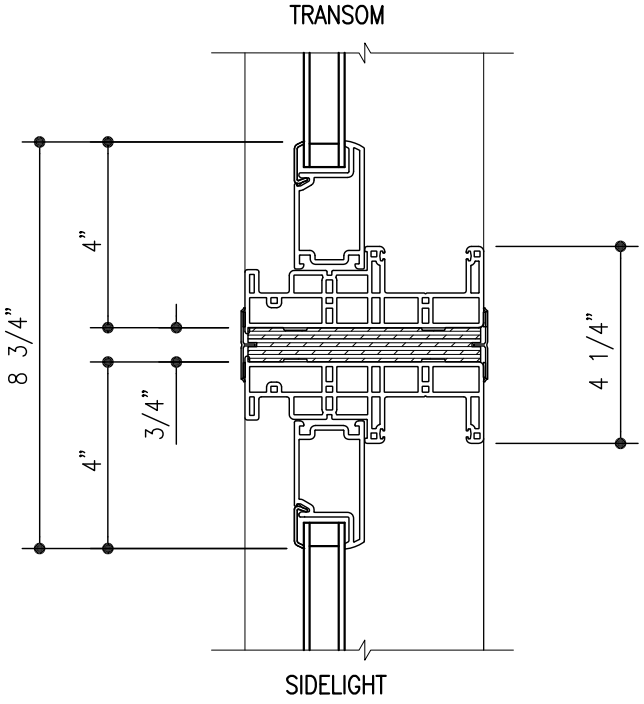

100 SERIES GLIDING SIDELIGHT/TRANSOM MULL

SCALE: 3" = 1'-0"

STUCCO KEY

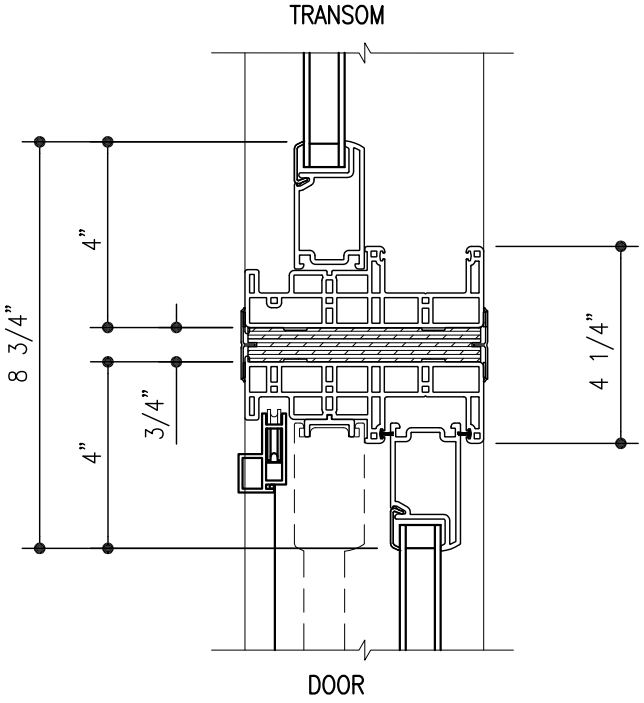

100 SERIES GLIDING DOOR/TRANSOM MULL

SCALE: 3" = 1'-0"

STUCCO KEY

8/29/12

Andersen WINDOWS • DOORS
Andersen Windows, Inc.
100 Fourth Avenue North
Bayport, Minnesota 55003

GLIDING DOOR TRANSOM

100 SERIES

H6