What's in This Section

Standard Windows . . . . . Page 3

Parts Illustration 3

Unit Sizes 4

Unit Assembly 5

Sash and Frame Assembly 5

Glass 6

Glass Size Table 6

Glass Kits 8

Grilles 11

Interior Grilles with Chisel Plungers (May 2010 to Present) 11

Interior Grilles with Metal Fasteners (2006 to May 2010) 16

Frames 20

Frames 20

Stools 20

Glass Stops 20

Trim Stops 21

Inside Trim 21

Extension Jambs 22

Jamb Liners 23

Flanges 24

Inside Trim Kits 25

Stops - Trim Kits 26

Stormwatch® Protection (Coastal Product) . . . . . Page 27

Glass 27

Glass Kits (Impact Resistant) 27

Glass Stop Kits 29

Frames 30

Installation Kits 30

Service Replacement . . . . . Page 31

Service Replacement Only Parts 31

Cartons 31

Standard Windows

Parts Illustration

Parts Illustration

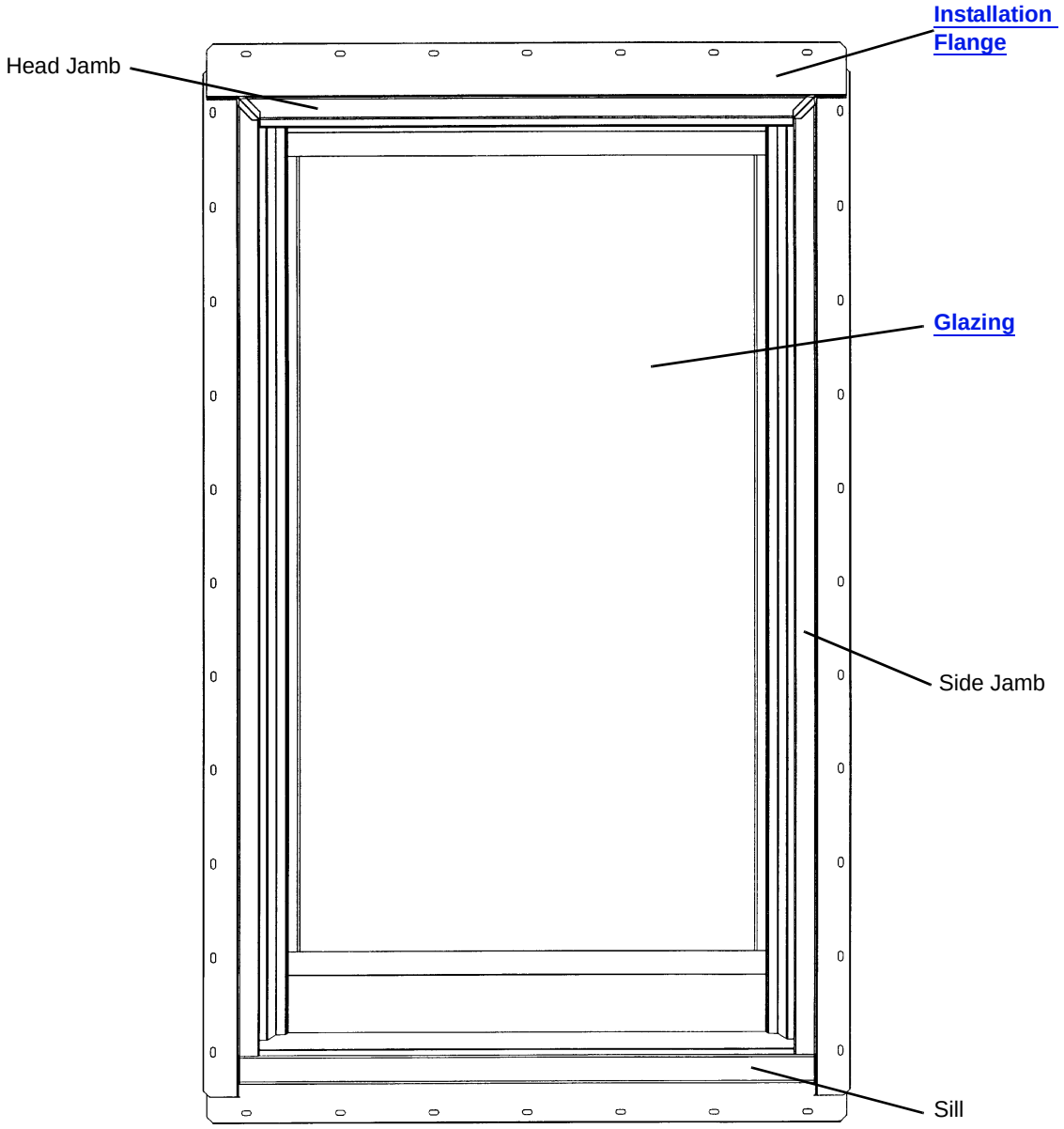

Manufactured 1996 to Present

Double-Hung Picture and Sidelight Window Unit Parts

Unit viewed from exterior.

Unit Sizes

Unit Size Chart

Note:
Unit Dimension refers to overall outside-to-outside frame. Unobstructed Glass refers to visible glass dimensions. Numbers in parentheses are metric measurements.

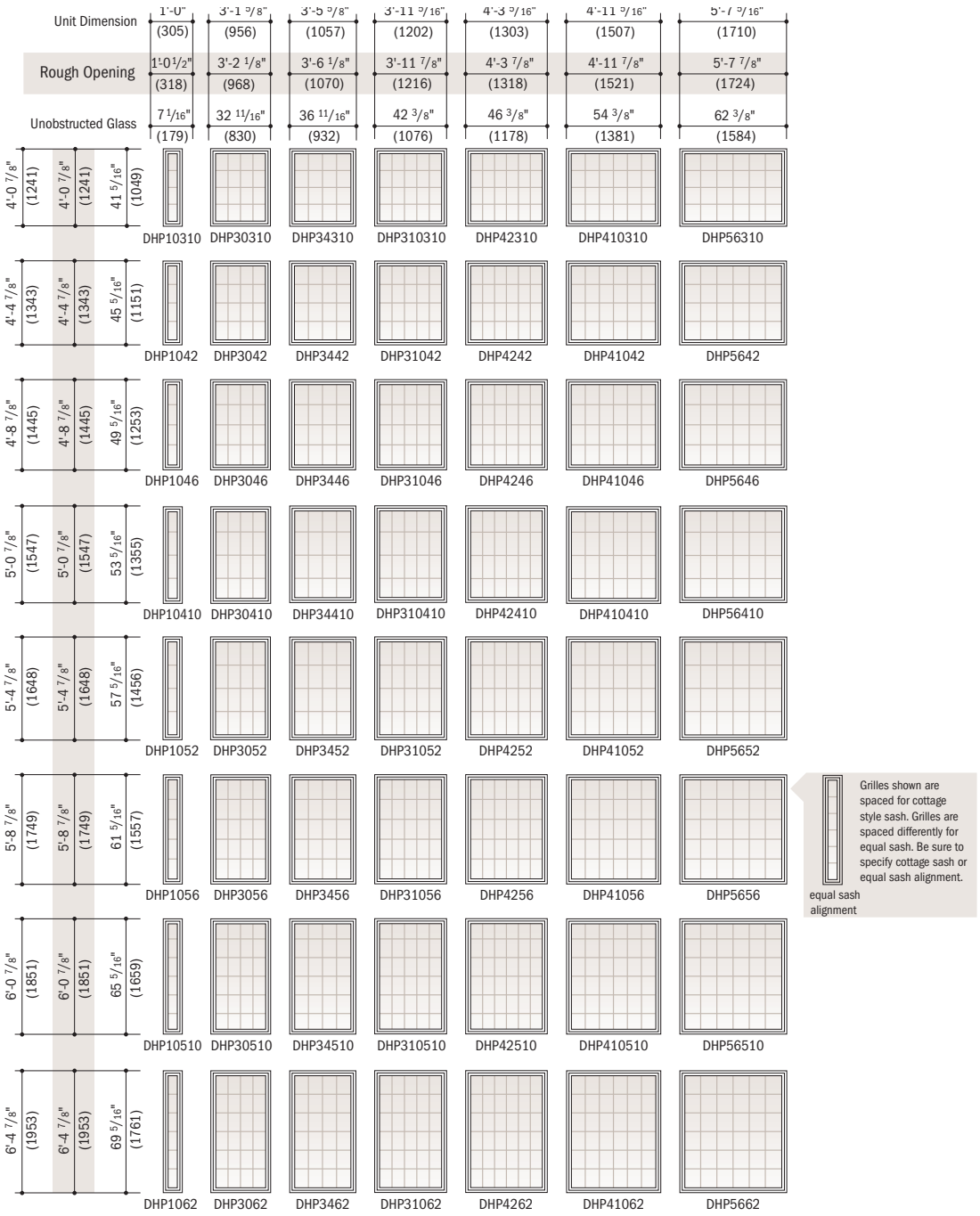

Double-Hung Picture and Sidelight Window Unit Sizes

Unit viewed from exterior.

Unit Assembly

Sash and Frame Assembly

1. Outer Frame
2. Sill
3. Stool

4. Glass Stop-Head/Sill
5. Glass Stop-Side

6. Trim Stop-Head/Sill
7. Trim Stop-Side
8. Inside Trim-Sill

9. Liner-Head
10. Liner-Side

11. Flange-Head/Sill
12. Flange-Side

13. Rail Assembly
14. Bottom Rail Assembly
15. Stile Assembly

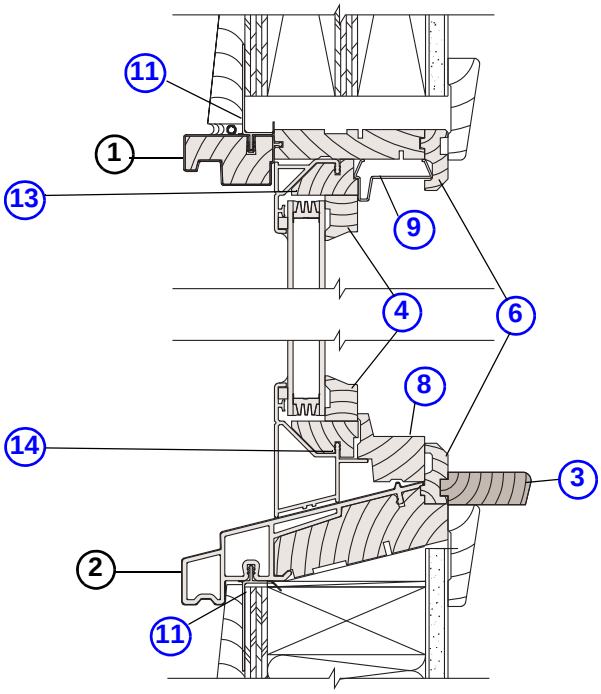

Vertical Section

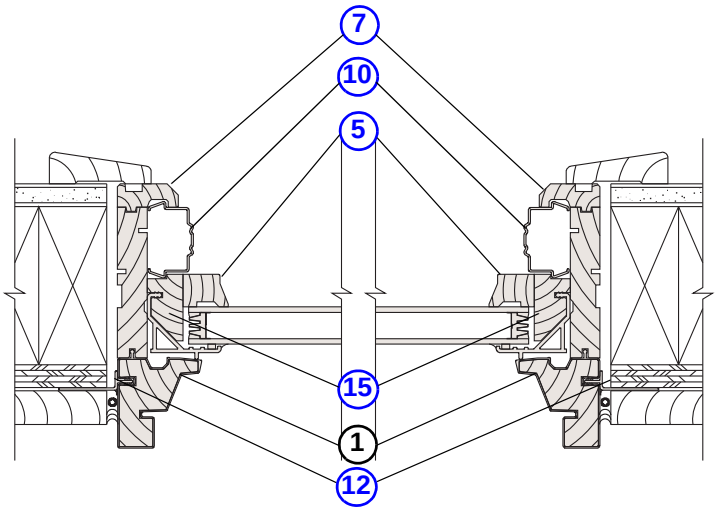

Horizontal Section

Double-Hung Picture and Sidelight Window Sash and Frame Assembly

Glass

Glass Size Table

Note:
Unobstructed Glass is dimension from outside edge to outside edge of visible glass only. Actual Glass is dimension of outside edge to outside edge of glass, including glass that is not visible.

Glass Size Table		
Unit No.	**Unobstructed Glass (w x h)**	**Actual Glass (w x h)**
DHP10310	$7\,{}^{1}/_{16} \times 41\,{}^{5}/_{16}$	$8\,{}^{23}/_{32} \times 42\,{}^{31}/_{32}$
DHP1042	$7\,{}^{1}/_{16} \times 45\,{}^{5}/_{16}$	$8\,{}^{23}/_{32} \times 46\,{}^{31}/_{32}$
DHP1046	$7\,{}^{1}/_{16} \times 49\,{}^{5}/_{16}$	$8\,{}^{23}/_{32} \times 50\,{}^{31}/_{32}$
DHP10410	$7\,{}^{1}/_{16} \times 53\,{}^{5}/_{16}$	$8\,{}^{23}/_{32} \times 54\,{}^{31}/_{32}$
DHP1052	$7\,{}^{1}/_{16} \times 57\,{}^{5}/_{16}$	$8\,{}^{23}/_{32} \times 58\,{}^{31}/_{32}$
DHP1056	$7\,{}^{1}/_{16} \times 61\,{}^{5}/_{16}$	$8\,{}^{23}/_{32} \times 62\,{}^{31}/_{32}$
DHP10510	$7\,{}^{1}/_{16} \times 65\,{}^{5}/_{16}$	$8\,{}^{23}/_{32} \times 66\,{}^{31}/_{32}$
DHP1062	$7\,{}^{1}/_{16} \times 69\,{}^{5}/_{16}$	$8\,{}^{23}/_{32} \times 70\,{}^{31}/_{32}$
DHP30310	$32\,{}^{11}/_{16} \times 41\,{}^{5}/_{16}$	$34\,{}^{11}/_{32} \times 42\,{}^{31}/_{32}$
DHP3042	$32\,{}^{11}/_{16} \times 45\,{}^{5}/_{16}$	$34\,{}^{11}/_{32} \times 46\,{}^{31}/_{32}$
DHP3046	$32\,{}^{11}/_{16} \times 49\,{}^{5}/_{16}$	$34\,{}^{11}/_{32} \times 50\,{}^{31}/_{32}$
DHP30410	$32\,{}^{11}/_{16} \times 53\,{}^{5}/_{16}$	$34\,{}^{11}/_{32} \times 54\,{}^{31}/_{32}$
DHP3052	$32\,{}^{11}/_{16} \times 57\,{}^{5}/_{16}$	$34\,{}^{11}/_{32} \times 58\,{}^{31}/_{32}$
DHP3056	$32\,{}^{11}/_{16} \times 61\,{}^{5}/_{16}$	$34\,{}^{11}/_{32} \times 62\,{}^{31}/_{32}$
DHP30510	$32\,{}^{11}/_{16} \times 65\,{}^{5}/_{16}$	$34\,{}^{11}/_{32} \times 66\,{}^{31}/_{32}$
DHP3062	$32\,{}^{11}/_{16} \times 69\,{}^{5}/_{16}$	$34\,{}^{11}/_{32} \times 70\,{}^{31}/_{32}$
DHP34310	$36\,{}^{11}/_{16} \times 41\,{}^{5}/_{16}$	$38\,{}^{11}/_{32} \times 42\,{}^{31}/_{32}$
DHP3442	$36\,{}^{11}/_{16} \times 45\,{}^{5}/_{16}$	$38\,{}^{11}/_{32} \times 46\,{}^{31}/_{32}$
DHP3446	$36\,{}^{11}/_{16} \times 49\,{}^{5}/_{16}$	$38\,{}^{11}/_{32} \times 50\,{}^{31}/_{32}$
DHP34410	$36\,{}^{11}/_{16} \times 53\,{}^{5}/_{16}$	$38\,{}^{11}/_{32} \times 54\,{}^{31}/_{32}$
DHP3452	$36\,{}^{11}/_{16} \times 57\,{}^{5}/_{16}$	$38\,{}^{11}/_{32} \times 58\,{}^{31}/_{32}$
DHP3456	$36\,{}^{11}/_{16} \times 61\,{}^{5}/_{16}$	$38\,{}^{11}/_{32} \times 62\,{}^{31}/_{32}$
DHP34510	$36\,{}^{11}/_{16} \times 65\,{}^{5}/_{16}$	$38\,{}^{11}/_{32} \times 66\,{}^{31}/_{32}$
DHP3462	$36\,{}^{11}/_{16} \times 69\,{}^{5}/_{16}$	$38\,{}^{11}/_{32} \times 70\,{}^{31}/_{32}$
DHP310310	$42\,{}^{3}/_{8} \times 41\,{}^{5}/_{16}$	$44\,{}^{1}/_{32} \times 42\,{}^{31}/_{32}$
DHP31042	$42\,{}^{3}/_{8} \times 45\,{}^{5}/_{16}$	$44\,{}^{1}/_{32} \times 46\,{}^{31}/_{32}$
DHP31046	$42\,{}^{3}/_{8} \times 49\,{}^{5}/_{16}$	$44\,{}^{1}/_{32} \times 50\,{}^{31}/_{32}$
DHP310410	$42\,{}^{3}/_{8} \times 53\,{}^{5}/_{16}$	$44\,{}^{1}/_{32} \times 54\,{}^{31}/_{32}$
DHP31052	$42\,{}^{3}/_{8} \times 57\,{}^{5}/_{16}$	$44\,{}^{1}/_{32} \times 58\,{}^{31}/_{32}$
DHP31056	$42\,{}^{3}/_{8} \times 61\,{}^{5}/_{16}$	$44\,{}^{1}/_{32} \times 62\,{}^{31}/_{32}$
DHP310510	$42\,{}^{3}/_{8} \times 65\,{}^{5}/_{16}$	$44\,{}^{1}/_{32} \times 66\,{}^{31}/_{32}$
DHP31062	$42\,{}^{3}/_{8} \times 69\,{}^{5}/_{16}$	$48\,{}^{1}/_{32} \times 70\,{}^{31}/_{32}$

Glass

Glass Size Table		
Unit No.	**Unobstructed Glass (w x h)**	**Actual Glass (w x h)**
DHP42310	$46\ ^{3}/_{8} \times 41\ ^{5}/_{16}$	$48\ ^{1}/_{32} \times 42\ ^{31}/_{32}$
DHP4242	$46\ ^{3}/_{8} \times 45\ ^{5}/_{16}$	$48\ ^{1}/_{32} \times 46\ ^{31}/_{32}$
DHP4246	$46\ ^{3}/_{8} \times 49\ ^{5}/_{16}$	$48\ ^{1}/_{32} \times 50\ ^{31}/_{32}$
DHP42410	$46\ ^{3}/_{8} \times 53\ ^{5}/_{16}$	$48\ ^{1}/_{32} \times 54\ ^{31}/_{32}$
DHP4252	$46\ ^{3}/_{8} \times 57\ ^{5}/_{16}$	$48\ ^{1}/_{32} \times 58\ ^{31}/_{32}$
DHP4256	$46\ ^{3}/_{8} \times 61\ ^{5}/_{16}$	$48\ ^{1}/_{32} \times 62\ ^{31}/_{32}$
DHP42510	$46\ ^{3}/_{8} \times 65\ ^{5}/_{16}$	$48\ ^{1}/_{32} \times 66\ ^{31}/_{32}$
DHP4262	$46\ ^{3}/_{8} \times 69\ ^{5}/_{16}$	$48\ ^{1}/_{32} \times 70\ ^{31}/_{32}$
DHP410310	$54\ ^{3}/_{8} \times 41\ ^{5}/_{16}$	$56\ ^{1}/_{32} \times 42\ ^{31}/_{32}$
DHP41042	$54\ ^{3}/_{8} \times 45\ ^{5}/_{16}$	$56\ ^{1}/_{32} \times 46\ ^{31}/_{32}$
DHP41046	$54\ ^{3}/_{8} \times 49\ ^{5}/_{16}$	$56\ ^{1}/_{32} \times 50\ ^{31}/_{32}$
DHP410410	$54\ ^{3}/_{8} \times 53\ ^{5}/_{16}$	$56\ ^{1}/_{32} \times 54\ ^{31}/_{32}$
DHP41052	$54\ ^{3}/_{8} \times 57\ ^{5}/_{16}$	$56\ ^{1}/_{32} \times 58\ ^{31}/_{32}$
DHP41056	$54\ ^{3}/_{8} \times 61\ ^{5}/_{16}$	$56\ ^{1}/_{32} \times 62\ ^{31}/_{32}$
DHP410510	$54\ ^{3}/_{8} \times 65\ ^{5}/_{16}$	$56\ ^{1}/_{32} \times 66\ ^{31}/_{32}$
DHP41062	$54\ ^{3}/_{8} \times 69\ ^{5}/_{16}$	$56\ ^{1}/_{32} \times 70\ ^{31}/_{32}$
DHP56310	$62\ ^{3}/_{8} \times 41\ ^{5}/_{16}$	$64\ ^{1}/_{32} \times 42\ ^{31}/_{32}$
DHP5642	$62\ ^{3}/_{8} \times 45\ ^{5}/_{16}$	$64\ ^{1}/_{32} \times 46\ ^{31}/_{32}$
DHP5646	$62\ ^{3}/_{8} \times 49\ ^{5}/_{16}$	$64\ ^{1}/_{32} \times 50\ ^{31}/_{32}$
DHP56410	$62\ ^{3}/_{8} \times 53\ ^{5}/_{16}$	$64\ ^{1}/_{32} \times 54\ ^{31}/_{32}$
DHP5652	$62\ ^{3}/_{8} \times 57\ ^{5}/_{16}$	$64\ ^{1}/_{32} \times 58\ ^{31}/_{32}$
DHP5656	$62\ ^{3}/_{8} \times 61\ ^{5}/_{16}$	$64\ ^{1}/_{32} \times 62\ ^{31}/_{32}$
DHP56510	$62\ ^{3}/_{8} \times 65\ ^{5}/_{16}$	$64\ ^{1}/_{32} \times 66\ ^{31}/_{32}$
DHP5662	$62\ ^{3}/_{8} \times 69\ ^{5}/_{16}$	$64\ ^{1}/_{32} \times 70\ ^{31}/_{32}$

Glass

Glass Kits

Note:
Glass Kits include glass, silicone, and glass spacer. Sizes not listed are available by description.

Glass Kit - High-Performance™ Low-E4® See illustration, page 3

Unit No.	Order No.	Unit No.	Order No.	Unit No.	Order No.
DHP1042	1640001	**DHP34510**	9051389	**DHP42510**	1640031
DHP1046	1640002	**DHP3462**	9051390	**DHP4262**	1640021
DHP10410	9051382	**DHP310310**	1640010	**DHP410310**	1640022
DHP1052	1640003	**DHP31042**	1640011	**DHP41042**	1640023
DHP10510	9051383	**DHP31046**	1640012	**DHP41046**	1640024
DHP1062	9051384	**DHP310410**	1640028	**DHP410410**	9051391
DHP30310	1640004	**DHP31052**	1640013	**DHP41052**	1640025
DHP3042	1640005	**DHP31056**	1640014	**DHP410510**	9051392
DHP3046	1640006	**DHP310510**	1640029	**DHP41062**	9051393
DHP30410	9051385	**DHP31062**	1640015	**DHP5642**	1640026
DHP3052	1640007	**DHP42310**	1640016	**DHP5646**	1640027
DHP30510	9051386	**DHP4242**	1640017	**DHP56410**	9051394
DHP3062	9051387	**DHP4246**	1640018	**DHP56510**	9051395
DHP3442	1640008	**DHP42410**	1640030	**DHP5662**	9051396
DHP3446	1640009	**DHP4252**	1640019		
DHP34410	9051388	**DHP4256**	1640020		

Glass Kit - High-Performance™ Low-E4® Sun

Note:
Sizes not listed are available by description.

Unit No.	Order No.	Unit No.	Order No.	Unit No.	Order No.
DHP1042	1640201	**DHP34510**	9051404	**DHP42510**	9051409
DHP1046	1640202	**DHP3462**	9051405	**DHP4262**	1640221
DHP10410	9051397	**DHP310310**	1640210	**DHP410310**	1640222
DHP1052	1640203	**DHP31042**	1640211	**DHP41042**	1640223
DHP10510	9051398	**DHP31046**	1640212	**DHP41046**	1640224
DHP1062	9051399	**DHP310410**	9051406	**DHP410410**	9051410
DHP30310	1640204	**DHP31052**	1640213	**DHP41052**	1640225
DHP3042	1640205	**DHP31056**	1640214	**DHP410510**	9051411
DHP3046	1640206	**DHP310510**	9051407	**DHP41062**	9051412
DHP30410	9051400	**DHP31062**	1640215	**DHP5642**	1640226
DHP3052	1640207	**DHP42310**	1640216	**DHP5646**	1640227
DHP30510	9051401	**DHP4242**	1640217	**DHP56410**	9051413
DHP3062	9051402	**DHP4246**	1640218	**DHP56510**	9051414
DHP3442	1640208	**DHP42410**	9051408	**DHP5662**	9051415
DHP3446	1640209	**DHP4252**	1640219		
DHP34410	9051403	**DHP4256**	1640220		

Glass

Glass Kit - High-Performance™ Low-E4® Tempered

Note:
Sizes not listed are available by description.

Unit No.	Order No.	Unit No.	Order No.	Unit No.	Order No.
DHP1042	1640101	**DHP34510**	9051423	**DHP42510**	9051428
DHP1046	1640102	**DHP3462**	9051424	**DHP4262**	1640121
DHP10410	9051416	**DHP310310**	1640110	**DHP410310**	1640122
DHP1052	1640103	**DHP31042**	1640111	**DHP41042**	1640123
DHP10510	9051417	**DHP31046**	1640112	**DHP41046**	1640124
DHP1062	9051418	**DHP310410**	9051425	**DHP410410**	9051429
DHP30310	1640104	**DHP31052**	1640113	**DHP41052**	1640125
DHP3042	1640105	**DHP31056**	1640114	**DHP410510**	9051430
DHP3046	1640106	**DHP310510**	9051426	**DHP41062**	9051431
DHP30410	9051419	**DHP31062**	1640115	**DHP5642**	1640126
DHP3052	1640107	**DHP42310**	1640116	**DHP5646**	1640127
DHP30510	9051420	**DHP4242**	1640117	**DHP56410**	9051432
DHP3062	9051421	**DHP4246**	1640118	**DHP56510**	9051433
DHP3442	1640108	**DHP42410**	9051427	**DHP5662**	9051434
DHP3446	1640109	**DHP4252**	1640119		
DHP34410	9051422	**DHP4256**	1640120		

Glass Kit - High-Performance™ Low-E4® Sun Tempered

Note:
Sizes not listed are available by description.

Unit No.	Order No.	Unit No.	Order No.	Unit No.	Order No.
DHP1042	1640301	**DHP34510**	9051442	**DHP42510**	9051447
DHP1046	1640302	**DHP3462**	9051443	**DHP4262**	1640321
DHP10410	9051435	**DHP310310**	1640310	**DHP410310**	1640322
DHP1052	1640303	**DHP31042**	1640311	**DHP41042**	1640323
DHP10510	9051436	**DHP31046**	1640312	**DHP41046**	1640324
DHP1062	9051437	**DHP310410**	9051444	**DHP410410**	9051448
DHP30310	1640304	**DHP31052**	1640313	**DHP41052**	1640325
DHP3042	1640305	**DHP31056**	1640314	**DHP410510**	9051449
DHP3046	1640306	**DHP310510**	9051445	**DHP41062**	9051450
DHP30410	9051438	**DHP31062**	1640315	**DHP5642**	1640326
DHP3052	1640307	**DHP42310**	1640316	**DHP5646**	1640327
DHP30510	9051439	**DHP4242**	1640317	**DHP56410**	9051451
DHP3062	9051440	**DHP4246**	1640318	**DHP56510**	9051452
DHP3442	1640308	**DHP42410**	9051446	**DHP5662**	9051453
DHP3446	1640309	**DHP4252**	1640319		
DHP34410	9051441	**DHP4256**	1640320		

Glass

Lateral Glass Spacer		
		Order No.
		2230012

Interior Grilles with Chisel Plungers (May 2010 to Present)

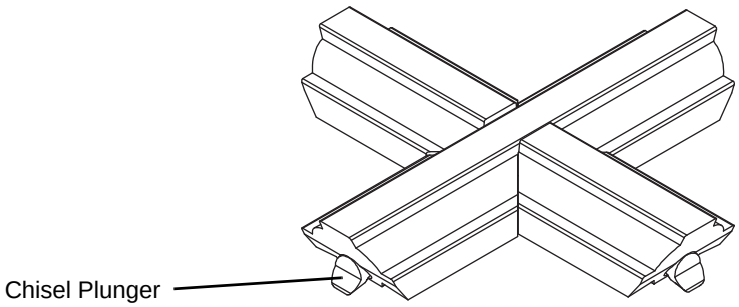

Interior Grilles - 3/4" Wood with Chisel Plungers

Interior Grille with Chisel Plungers - Colonial / 3/4´ Wood / Natural Wood Interior *(May 2010 – Present)*							
Unit No.	**Dimensions (w x h)**	**Natural Wood Interior/ White Exterior**	**Natural Wood Interior/ Terratone® Exterior**	**Natural Wood Interior/ Sandtone Exterior**	**Natural Wood Interior/ Forest Green Exterior**	**Natural Wood Interior/ Canvas Exterior**	**Natural Wood Interior/ Dark Bronze Exterior**
DHP10	$7\ ^{3}/_{32}$	9038953	9039085	9038604	9038487	9047706	9072427
DHP30310	$32\ ^{15}/_{16} \times 41\ ^{19}/_{32}$	9038829	9039153	9038639	9038459	9047678	9072399
DHP3042	$32\ ^{15}/_{16} \times 45\ ^{19}/_{32}$	9038830	9039154	9038640	9038460	9047679	9072400
DHP3046	$32\ ^{15}/_{16} \times 49\ ^{19}/_{32}$	9038831	9039155	9038641	9038461	9047680	9072401
DHP3052	$32\ ^{15}/_{16} \times 57\ ^{19}/_{32}$	9038832	9039156	9038642	9038462	9047681	9072402
DHP310310	$42\ ^{5}/_{8} \times 41\ ^{19}/_{32}$	9038835	9039086	9038586	9038465	9047684	9072405
DHP31042	$42\ ^{5}/_{8} \times 45\ ^{19}/_{32}$	9038836	9039087	9038587	9038466	9047685	9072406
DHP31046	$42\ ^{5}/_{8} \times 49\ ^{19}/_{32}$	9038837	9039088	9038588	9038467	9047686	9072407
DHP310410	$42\ ^{5}/_{8} \times 53\ ^{19}/_{32}$	9038853	By description	By description	9038483	9047702	9072423
DHP31052	$42\ ^{5}/_{8} \times 57\ ^{19}/_{32}$	9038838	9039089	9038589	9038468	9047687	9072408
DHP31056	$42\ ^{5}/_{8} \times 61\ ^{19}/_{32}$	9038839	9039090	9038590	9038469	9047688	9072409
DHP310510	$42\ ^{5}/_{8} \times 65\ ^{19}/_{32}$	9038854	By description	By description	9038484	9047703	9072424
DHP31062	$42\ ^{5}/_{8} \times 69\ ^{19}/_{32}$	9038840	9039091	9038591	9038470	9047689	9072410
DHP3442	$36\ ^{15}/_{16} \times 45\ ^{19}/_{32}$	9038833	9039157	9038643	9038463	9047682	9072403
DHP3446	$36\ ^{15}/_{16} \times 49\ ^{19}/_{32}$	9038834	9039158	9038644	9038464	9047683	9072404
DHP410310	$54\ ^{5}/_{8} \times 41\ ^{19}/_{32}$	9038845	9039096	9038596	9038475	9047694	9072415
DHP41042	$54\ ^{5}/_{8} \times 45\ ^{19}/_{32}$	9038846	9039097	9038597	9038476	9047695	9072416
DHP41046	$54\ ^{5}/_{8} \times 49\ ^{19}/_{32}$	9038847	9039098	9038598	9038477	9047696	9072417
DHP41052	$54\ ^{5}/_{8} \times 57\ ^{19}/_{32}$	9038848	9039099	9038599	9038478	9047697	9072418

Grilles

Interior Grille with Chisel Plungers - Colonial / 3/4˝ Wood / Natural Wood Interior *(May 2010 – Present)*

Unit No.	Dimensions (w x h)	Natural Wood Interior/ White Exterior	Natural Wood Interior/ Terratone® Exterior	Natural Wood Interior/ Sandtone Exterior	Natural Wood Interior/ Forest Green Exterior	Natural Wood Interior/ Canvas Exterior	Natural Wood Interior/ Dark Bronze Exterior
DHP42310	46 5/8 × 41 19/32	9038841	9039092	9038592	9038471	9047690	9072411
DHP4242	46 5/8 × 45 19/32	9038842	9039093	9038593	9038472	9047691	9072412
DHP4246	46 5/8 × 49 19/32	9038843	9039094	9038594	9038473	9047692	9072413
DHP42410	46 5/8 × 53 19/32	9038855	By description	By description	9038485	9047704	9072425
DHP4252	46 5/8 × 57 19/32	9038844	9039095	9038595	9038474	9047693	9072414
DHP4256	46 5/8 × 61 19/32	9038851	9039102	9038602	9038481	9047700	9072421
DHP42510	46 5/8 × 65 19/32	9038856	By description	By description	9038486	9047705	9072426
DHP4262	46 5/8 × 69 19/32	9038852	9039103	9038603	9038482	9047701	9072422
DHP5642	62 5/8 × 45 19/32	9038849	9039100	9038600	9038479	9047698	9072419
DHP5646	62 5/8 × 49 19/32	9038850	9039101	9038601	9038480	9047699	9072420

Interior Grille with Chisel Plungers - Colonial / 3/4˝ Wood / Prefinished Interior *(May 2010 – Present)*

Note:
Prefinished interior Terratone®, Sandtone, Canvas and Dark Bronze grilles are available by description/configured.

Unit No.	Dimensions (w x h)	White	Unit No.	Dimensions (w x h)	White
DHP10	7 3/32	9038954	**DHP410310**	54 5/8 × 41 19/32	9038867
DHP30310	32 15/16 × 41 19/32	9038879	**DHP41042**	54 5/8 × 45 19/32	9038868
DHP3042	32 15/16 × 45 19/32	9038880	**DHP41046**	54 5/8 × 49 19/32	9038869
DHP3046	32 15/16 × 49 19/32	9038881	**DHP41052**	54 5/8 × 57 19/32	9038870
DHP3052	32 15/16 × 57 19/32	9038882	**DHP42310**	46 5/8 × 41 19/32	9038863
DHP310310	42 5/8 × 41 19/32	9038857	**DHP4242**	46 5/8 × 45 19/32	9038864
DHP31042	42 5/8 × 45 19/32	9038858	**DHP4246**	46 5/8 × 49 19/32	9038865
DHP31046	42 5/8 × 49 19/32	9038859	**DHP42410**	46 5/8 × 53 19/32	9038877
DHP310410	42 5/8 × 53 19/32	9038875	**DHP4252**	46 5/8 × 57 19/32	9038866
DHP31052	42 5/8 × 57 19/32	9038883	**DHP4256**	46 5/8 × 61 19/32	9038873
DHP31056	42 5/8 × 61 19/32	9038861	**DHP42510**	46 5/8 × 65 19/32	9038878
DHP310510	42 5/8 × 65 19/32	9038860	**DHP4262**	46 5/8 × 69 19/32	9038874
DHP31062	42 5/8 × 69 19/32	9038862	**DHP5642**	62 5/8 × 45 19/32	9038871
DHP3442	36 15/16 × 45 19/32	9038876	**DHP5646**	62 5/8 × 49 19/32	9038872
DHP3446	36 15/16 × 49 19/32	9038884			

Grilles

Interior Grille with Chisel Plungers - Colonial / 3/4˝ Wood / Cottage / Natural Wood Interior *(May 2010 – Present)*							
Unit No.	**Dimensions (w x h)**	**White**	**Terratone®**	**Sandtone**	**Forest Green**	**Canvas**	**Dark Bronze**
DHP30310C	$32\ ^{15}/_{16} \times 41\ ^{19}/_{32}$	9038885	9039254	9038621	9038552	9047771	9072492
DHP3042C	$32\ ^{15}/_{16} \times 45\ ^{19}/_{32}$	9038886	9039255	9038622	9038553	9047772	9072493
DHP3046C	$32\ ^{15}/_{16} \times 49\ ^{19}/_{32}$	9038887	9039256	9038623	9038554	9047773	9072494
DHP30410C	$32\ ^{15}/_{16} \times 53\ ^{19}/_{32}$	9038941	9039260	9038627	9038574	9047793	9072514
DHP3052C	$32\ ^{15}/_{16} \times 57\ ^{19}/_{32}$	9038888	9039257	9038624	9038555	9047774	9072495
DHP3056C	$32\ ^{15}/_{16} \times 61\ ^{19}/_{32}$	9038942	9039261	9038628	9038575	9047794	9072515
DHP310310C	$42\ ^{5}/_{8} \times 41\ ^{19}/_{32}$	9038891	9039238	9038605	9038558	9047777	9072498
DHP31042C	$42\ ^{5}/_{8} \times 45\ ^{19}/_{32}$	9038892	9039239	9038606	9038559	9047778	9072499
DHP31046C	$42\ ^{5}/_{8} \times 49\ ^{19}/_{32}$	9038893	9039240	9038607	9038560	9047779	9072500
DHP310410C	$42\ ^{5}/_{8} \times 53\ ^{19}/_{32}$	9038905	9039252	9038619	9038572	9047791	9072512
DHP31052C	$42\ ^{5}/_{8} \times 57\ ^{19}/_{32}$	9038894	9039241	9038608	9038561	9047780	9072501
DHP34310C	$36\ ^{15}/_{16} \times 41\ ^{19}/_{32}$	9038943	9039262	9038629	9038576	9047795	9072516
DHP3442C	$36\ ^{15}/_{16} \times 45\ ^{19}/_{32}$	9038889	9039258	9038625	9038556	9047775	9072496
DHP3446C	$36\ ^{15}/_{16} \times 49\ ^{19}/_{32}$	9038890	9039259	9038626	9038557	9047776	9072497
DHP34410C	$36\ ^{15}/_{16} \times 53\ ^{19}/_{32}$	9038944	9039263	9038630	9038577	9047796	9072517
DHP3452C	$36\ ^{15}/_{16} \times 57\ ^{19}/_{32}$	9038945	9039264	9038631	9038578	9047797	9072518
DHP3456C	$36\ ^{15}/_{16} \times 61\ ^{19}/_{32}$	9038946	9039265	9038632	9038579	9047798	9072519
DHP410310C	$54\ ^{5}/_{8} \times 41\ ^{19}/_{32}$	9038899	9039246	9038613	9038566	9047785	9072506
DHP41042C	$54\ ^{5}/_{8} \times 45\ ^{19}/_{32}$	9038900	9039247	9038614	9038567	9047786	9072507
DHP41046C	$54\ ^{5}/_{8} \times 49\ ^{19}/_{32}$	9038901	9039248	9038615	9038568	9047787	9072508
DHP410410C	$54\ ^{5}/_{8} \times 53\ ^{19}/_{32}$	9038947	9039266	9038633	9038580	9047799	9072520
DHP41052C	$54\ ^{5}/_{8} \times 57\ ^{19}/_{32}$	9038902	9039249	9038616	9038569	9047788	9072509
DHP41056C	$54\ ^{5}/_{8} \times 61\ ^{19}/_{32}$	9038948	9039267	9038634	9038581	9047800	9072521
DHP42310C	$46\ ^{5}/_{8} \times 41\ ^{19}/_{32}$	9038895	9039242	9038609	9038562	9047781	9072502
DHP4242C	$46\ ^{5}/_{8} \times 45\ ^{19}/_{32}$	9038896	9039243	9038610	9038563	9047782	9072503
DHP4246C	$46\ ^{5}/_{8} \times 49\ ^{19}/_{32}$	9038897	9039244	9038611	9038564	9047783	9072504
DHP42410C	$46\ ^{5}/_{8} \times 53\ ^{19}/_{32}$	9038906	9039253	9038620	9038573	9047792	9072513
DHP4252C	$46\ ^{5}/_{8} \times 57\ ^{19}/_{32}$	9038898	9039245	9038612	9038565	9047784	9072505
DHP56310C	$62\ ^{5}/_{8} \times 45\ ^{19}/_{3}$	9038949	9039268	9038635	9038582	9047801	9072522
DHP5642C	$62\ ^{5}/_{8} \times 45\ ^{19}/_{32}$	9038903	9039250	9038617	9038570	9047789	9072510
DHP5646C	$62\ ^{5}/_{8} \times 49\ ^{19}/_{32}$	9038904	9039251	9038618	9038571	9047790	9072511
DHP56410C	$62\ ^{5}/_{8} \times 53\ ^{19}/_{32}$	9038950	9039269	9038636	9038583	9047802	9072523
DHP5652C	$62\ ^{5}/_{8} \times 57\ ^{19}/_{32}$	9038951	9039270	9038637	9038584	9047803	9072524
DHP5656C	$62\ ^{5}/_{8} \times 61\ ^{19}/_{32}$	9038952	9039271	9038638	9038585	9047804	9072525

Grilles

Interior Grille with Chisel Plungers - Colonial / 3/4´´ Wood / Cottage / Prefinished Interior *(May 2010 – Present)*					
Note: Prefinished interior Terratone®, Sandtone, Canvas and Dark Bronze grilles are available by description/configured.					
Unit No.	**Dimensions (w x h)**	**White**	**Unit No.**	**Dimensions (w x h)**	**White**
DHP30310C	32 15/16 × 41 19/32	9038907	**DHP410310C**	54 5/8 × 41 19/32	9038919
DHP3042C	32 15/16 × 45 19/32	9038908	**DHP41042C**	54 5/8 × 45 19/32	9038920
DHP3046C	32 15/16 × 49 19/32	9038909	**DHP41046C**	54 5/8 × 49 19/32	9038921
DHP30410C	32 15/16 × 53 19/32	9038929	**DHP410410C**	54 5/8 × 53 19/32	9038935
DHP3052C	32 15/16 × 57 19/32	9038910	**DHP41052C**	54 5/8 × 57 19/32	9038922
DHP3056C	32 15/16 × 61 19/32	9038930	**DHP41056C**	54 5/8 × 61 19/32	9038936
DHP310310C	42 5/8 × 41 19/32	9038911	**DHP42310C**	46 5/8 × 41 19/32	9038915
DHP31042C	42 5/8 × 45 19/32	9038912	**DHP4242C**	46 5/8 × 45 19/32	9038916
DHP31046C	42 5/8 × 49 19/32	9038913	**DHP4246C**	46 5/8 × 49 19/32	9038917
DHP310410C	42 5/8 × 53 19/32	9038925	**DHP42410C**	46 5/8 × 53 19/32	9038926
DHP31052C	42 5/8 × 57 19/32	9038914	**DHP4252C**	46 5/8 × 57 19/32	9038918
DHP34310C	36 15/16 × 41 19/32	9038931	**DHP56310C**	62 5/8 × 45 19/3	9038937
DHP3442C	36 15/16 × 45 19/32	9038927	**DHP5642C**	62 5/8 × 45 19/32	9038923
DHP3446C	36 15/16 × 49 19/32	9038928	**DHP5646C**	62 5/8 × 49 19/32	9038924
DHP34410C	36 15/16 × 53 19/32	9038932	**DHP56410C**	62 5/8 × 53 19/32	9038938
DHP3452C	36 15/16 × 57 19/32	9038933	**DHP5652C**	62 5/8 × 57 19/32	9038939
DHP3456C	36 15/16 × 61 19/32	9038934	**DHP5656C**	62 5/8 × 61 19/32	9038940

Grilles

Interior Grille with Chisel Plungers - Prairie A / 3/4˝ Wood / Natural Wood Interior *(May 2010 – Present)*							
Unit No.	**Dimensions (w x h)**	**Natural Wood Interior/ White Exterior**	**Natural Wood Interior/ Terratone® Exterior**	**Natural Wood Interior/ Sandtone Exterior**	**Natural Wood Interior/ Forest Green Exterior**	**Natural Wood Interior/ Canvas Exterior**	**Natural Wood Interior/ Dark Bronze Exterior**
DHP10	$7\ ^{3}/_{32}$	By description	By description	By description	By description	By description	By description
DHP30310	$32\ ^{15}/_{16} \times 41\ ^{19}/_{32}$	9040949	9041001	9040897	9040845	9047835	9072556
DHP3042	$32\ ^{15}/_{16} \times 45\ ^{19}/_{32}$	9040950	9041002	9040898	9040846	9047836	9072557
DHP3046	$32\ ^{15}/_{16} \times 49\ ^{19}/_{32}$	9040951	9041003	9040899	9040847	9047837	9072558
DHP3052	$32\ ^{15}/_{16} \times 57\ ^{19}/_{32}$	9040952	9041004	9040900	9040848	9047838	9072559
DHP310310	$42\ ^{5}/_{8} \times 41\ ^{19}/_{32}$	9040953	9041005	9040901	9040849	9047839	9072560
DHP31042	$42\ ^{5}/_{8} \times 45\ ^{19}/_{32}$	9040955	9041006	9040902	9040851	9047841	9072562
DHP31046	$42\ ^{5}/_{8} \times 49\ ^{19}/_{32}$	9040956	9041007	9040903	9040852	9047842	9072563
DHP310410	$42\ ^{5}/_{8} \times 53\ ^{19}/_{32}$	9040954	By description	By description	9040850	9047840	9072561
DHP31052	$42\ ^{5}/_{8} \times 57\ ^{19}/_{32}$	9040958	9041008	9040904	9040854	9047844	9072565
DHP31056	$42\ ^{5}/_{8} \times 61\ ^{19}/_{32}$	9040959	9041009	9040905	9040855	9047845	9072566
DHP310510	$42\ ^{5}/_{8} \times 65\ ^{19}/_{32}$	9040957	By description	By description	9040853	9047843	9072564
DHP31062	$42\ ^{5}/_{8} \times 69\ ^{19}/_{32}$	9040960	9041010	9040906	9040856	9047846	9072567
DHP3442	$36\ ^{15}/_{16} \times 45\ ^{19}/_{32}$	9040961	9041011	9040907	9040857	9047847	9072568
DHP3446	$36\ ^{15}/_{16} \times 49\ ^{19}/_{32}$	9040962	9041012	9040908	9040858	9047848	9072569
DHP410310	$54\ ^{5}/_{8} \times 41\ ^{19}/_{32}$	9040963	9041013	9040909	9040859	9047849	9072570
DHP41042	$54\ ^{5}/_{8} \times 45\ ^{19}/_{32}$	9040964	9041014	9040910	9040860	9047850	9072571
DHP41046	$54\ ^{5}/_{8} \times 49\ ^{19}/_{32}$	9040965	9041015	9040911	9040861	9047851	9072572
DHP41052	$54\ ^{5}/_{8} \times 57\ ^{19}/_{32}$	9040966	9041016	9040912	9040862	9047852	9072573
DHP42310	$46\ ^{5}/_{8} \times 41\ ^{19}/_{32}$	9040967	9041017	9040913	9040863	9047853	9072574
DHP4242	$46\ ^{5}/_{8} \times 45\ ^{19}/_{32}$	9040969	9041018	9040914	9040865	9047855	9072576
DHP4246	$46\ ^{5}/_{8} \times 49\ ^{19}/_{32}$	9040970	9041019	9040915	9040866	9047856	9072577
DHP42410	$46\ ^{5}/_{8} \times 53\ ^{19}/_{32}$	9040968	By description	By description	9040864	9047854	9072575
DHP4252	$46\ ^{5}/_{8} \times 57\ ^{19}/_{32}$	9040972	9041020	9040916	9040868	9047858	9072579
DHP4256	$46\ ^{5}/_{8} \times 61\ ^{19}/_{32}$	9040973	9041021	9040917	9040869	9047859	9072580
DHP42510	$46\ ^{5}/_{8} \times 65\ ^{19}/_{32}$	9040971	By description	By description	9040867	9047857	9072578
DHP4262	$46\ ^{5}/_{8} \times 69\ ^{19}/_{32}$	9040974	9041022	9040918	9040870	9047860	9072581
DHP5642	$62\ ^{5}/_{8} \times 45\ ^{19}/_{32}$	9040975	9041023	9040919	9040871	9047861	9072582
DHP5646	$62\ ^{5}/_{8} \times 49\ ^{19}/_{32}$	9040976	9041024	9040920	9040872	9047862	9072583

Grilles

Interior Grilles with Metal Fasteners (2006 to May 2010)

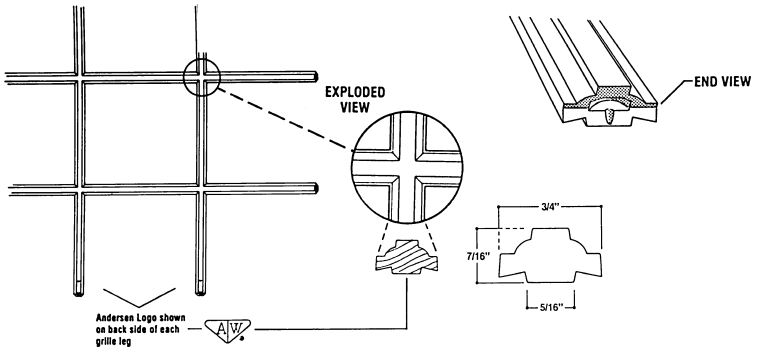

Double-Hung Picture Window Interior Grilles - Colonial / 3/4˝ Wood

Interior Grille with Clips - Colonial / 3/4˝ Wood / Natural Wood Interior *(1996 – May 2010)*

Note:
Grilles marked with an asterisk (*) are special order. When ordering include the following in your description: product type, exterior color, interior color, grille pattern, and grille profile. For example: DHP3042 grille, Terratone®, prefinished, 4W x 4H, 3/4˝ profile.

Unit No.	Dimensions (w x h)	White	Terratone®	Sandtone	Forest Green
DHP10	$7\ ^{3}/_{32}$	1669036	2703120	1138957	0314246
DHP30310	$32\ ^{15}/_{16} \times 41\ ^{19}/_{32}$	1611674	2710774	1139274	0312654
DHP3042	$32\ ^{15}/_{16} \times 45\ ^{19}/_{32}$	1611675	2710775	1139275	0312655
DHP3046	$32\ ^{15}/_{16} \times 49\ ^{19}/_{32}$	1611676	2710776	1139276	0312656
DHP3052	$32\ ^{15}/_{16} \times 57\ ^{19}/_{32}$	1611677	2710777	1139277	0312657
DHP310310	$42\ ^{5}/_{8} \times 41\ ^{19}/_{32}$	1611942	2704942	1138142	0313242
DHP31042	$42\ ^{5}/_{8} \times 45\ ^{19}/_{32}$	1611943	2704943	1138143	0313243
DHP31046	$42\ ^{5}/_{8} \times 49\ ^{19}/_{32}$	1611944	2704944	1138144	0313244
DHP310410	$42\ ^{5}/_{8} \times 53\ ^{19}/_{32}$	1611980	*	*	0313280
DHP31052	$42\ ^{5}/_{8} \times 57\ ^{19}/_{32}$	1611945	2704945	1138145	0313245
DHP31056	$42\ ^{5}/_{8} \times 61\ ^{19}/_{32}$	1611946	2704946	1138146	0313246
DHP310510	$42\ ^{5}/_{8} \times 65\ ^{19}/_{32}$	1611981	*	*	0313281
DHP31062	$42\ ^{5}/_{8} \times 69\ ^{19}/_{32}$	1611947	2704947	1138147	0313247
DHP3442	$36\ ^{15}/_{16} \times 45\ ^{19}/_{32}$	1611681	2710781	1139281	0312661
DHP3446	$36\ ^{15}/_{16} \times 49\ ^{19}/_{32}$	1611682	2710782	1139282	0312662
DHP410310	$54\ ^{5}/_{8} \times 41\ ^{19}/_{32}$	1611956	2704956	1138156	0313256
DHP41042	$54\ ^{5}/_{8} \times 45\ ^{19}/_{32}$	1611957	2704957	1138157	0313257
DHP41046	$54\ ^{5}/_{8} \times 49\ ^{19}/_{32}$	1611958	2704958	1138158	0313258
DHP41052	$54\ ^{5}/_{8} \times 57\ ^{19}/_{32}$	1611959	2704959	1138159	0313259
DHP42310	$46\ ^{5}/_{8} \times 41\ ^{19}/_{32}$	1611950	2704950	1138150	0313250

Grilles

Interior Grille with Clips - Colonial / 3/4˝ Wood / Natural Wood Interior *(1996 – May 2010)*

Note:
Grilles marked with an asterisk (*) are special order. When ordering include the following in your description: product type, exterior color, interior color, grille pattern, and grille profile. For example: DHP3042 grille, Terratone®, prefinished, 4W x 4H, 3/4˝ profile.

Unit No.	Dimensions (w x h)	White	Terratone®	Sandtone	Forest Green
DHP4242	46 5/8 × 45 19/32	1611951	2704951	1138151	0313251
DHP4246	46 5/8 × 49 19/32	1611952	2704952	1138152	0313252
DHP42410	46 5/8 × 53 19/32	1611982	*	*	0313282
DHP4252	46 5/8 × 57 19/32	1611953	2704953	1138153	0313253
DHP4256	46 5/8 × 61 19/32	1611966	2704966	1138166	0313266
DHP42510	46 5/8 × 65 19/32	1611983	*	*	0313283
DHP4262	46 5/8 × 69 19/32	1611969	2704969	1138169	0313269
DHP5642	62 5/8 × 45 19/32	1611963	2704963	1138163	0313263
DHP5646	62 5/8 × 49 19/32	1611964	2704964	1138164	0313264

Interior Grill - Colonial / 3/4˝ Wood / Prefinished Interior *(1996 – May 2010)*

Note:
Prefinished interior Terratone® and Sandtone grilles are available by description.

Unit No.	Dimensions (w x h)	White	Unit No.	Dimensions (w x h)	White
DHP10	7 3/32	1669037	**DHP410310**	54 5/8 × 41 19/32	1612156
DHP30310	32 15/16 × 41 19/32	1612974	**DHP41042**	54 5/8 × 45 19/32	1612157
DHP3042	32 15/16 × 45 19/32	1612975	**DHP41046**	54 5/8 × 49 19/32	1612158
DHP3046	32 15/16 × 49 19/32	1612976	**DHP41052**	54 5/8 × 57 19/32	1612159
DHP3052	32 15/16 × 57 19/32	1612977	**DHP42310**	46 5/8 × 41 19/32	1612150
DHP310310	42 5/8 × 41 19/32	1612142	**DHP4242**	46 5/8 × 45 19/32	1612151
DHP31042	42 5/8 × 45 19/32	1612143	**DHP4246**	46 5/8 × 49 19/32	1612152
DHP31046	42 5/8 × 49 19/32	1612144	**DHP42410**	46 5/8 × 53 19/32	1612182
DHP310410	42 5/8 × 53 19/32	1612180	**DHP4252**	46 5/8 × 57 19/32	1612153
DHP3442	36 15/16 × 45 19/32	1612981	**DHP4256**	46 5/8 × 61 19/32	1612166
DHP3446	36 15/16 × 49 19/32	1612982	**DHP42510**	46 5/8 × 65 19/32	1612183
DHP31052	42 5/8 × 57 19/32	1612145	**DHP4262**	46 5/8 × 69 19/32	1612169
DHP31056	42 5/8 × 61 19/32	1612146	**DHP5642**	62 5/8 × 45 19/32	1612163
DHP310510	42 5/8 × 65 19/32	1612181	**DHP5646**	62 5/8 × 49 19/32	1612164
DHP31062	42 5/8 × 69 19/32	1612147			

Grilles

Interior Grille - Colonial / 3/4˝ Wood / Cottage / Natural Wood Interior *(1996 – May 2010)*					
Unit No.	**Dimensions (w x h)**	**White**	**Terratone®**	**Sandtone**	**Forest Green**
DHP30310C	$32\ ^{15}/_{16} \times 41\ ^{19}/_{32}$	1631620	2725072	1138982	0317001
DHP3042C	$32\ ^{15}/_{16} \times 45\ ^{19}/_{32}$	1631621	2725073	1138983	0317002
DHP3046C	$32\ ^{15}/_{16} \times 49\ ^{19}/_{32}$	1631622	2725074	1138984	0317003
DHP30410C	$32\ ^{15}/_{16} \times 53\ ^{19}/_{32}$	1631688	2725078	1138988	0317029
DHP3052C	$32\ ^{15}/_{16} \times 57\ ^{19}/_{32}$	1631623	2725075	1138985	0317004
DHP3056C	$32\ ^{15}/_{16} \times 61\ ^{19}/_{32}$	1631689	2725079	1138989	0317030
DHP310310C	$42\ ^{5}/_{8} \times 41\ ^{19}/_{32}$	1631626	2725050	1138960	0317007
DHP31042C	$42\ ^{5}/_{8} \times 45\ ^{19}/_{32}$	1631627	2725051	1138961	0317008
DHP31046C	$42\ ^{5}/_{8} \times 49\ ^{19}/_{32}$	1631628	2725052	1138962	0317009
DHP310410C	$42\ ^{5}/_{8} \times 53\ ^{19}/_{32}$	1631644	2725068	1138978	0317025
DHP31052C	$42\ ^{5}/_{8} \times 57\ ^{19}/_{32}$	1631629	2725053	1138963	0317010
DHP34310C	$36\ ^{15}/_{16} \times 41\ ^{19}/_{32}$	1631690	2725080	1138990	0317031
DHP3442C	$36\ ^{15}/_{16} \times 45\ ^{19}/_{32}$	1631624	2725076	1138986	0317005
DHP3446C	$36\ ^{15}/_{16} \times 49\ ^{19}/_{32}$	1631625	2725077	1138987	0317006
DHP34410C	$36\ ^{15}/_{16} \times 53\ ^{19}/_{32}$	1631691	2725081	1138991	0317032
DHP3452C	$36\ ^{15}/_{16} \times 57\ ^{19}/_{32}$	1631692	2725082	1138992	0317033
DHP3456C	$36\ ^{15}/_{16} \times 61\ ^{19}/_{32}$	1631693	2725083	1138993	0317034
DHP410310C	$54\ ^{5}/_{8} \times 41\ ^{19}/_{32}$	1631636	2725060	1138970	0317017
DHP41042C	$54\ ^{5}/_{8} \times 45\ ^{19}/_{32}$	1631637	2725061	1138971	0317018
DHP41046C	$54\ ^{5}/_{8} \times 49\ ^{19}/_{32}$	1631638	2725062	1138972	0317019
DHP410410C	$54\ ^{5}/_{8} \times 53\ ^{19}/_{32}$	1631694	2725084	1138994	0317035
DHP41052C	$54\ ^{5}/_{8} \times 57\ ^{19}/_{32}$	1631639	2725063	1138973	0317020
DHP41056C	$54\ ^{5}/_{8} \times 61\ ^{19}/_{32}$	1631695	2725085	1138995	0317036
DHP42310C	$46\ ^{5}/_{8} \times 41\ ^{19}/_{32}$	1631632	2725056	1138966	0317013
DHP4242C	$46\ ^{5}/_{8} \times 45\ ^{19}/_{32}$	1631633	2725057	1138967	0317014
DHP4246C	$46\ ^{5}/_{8} \times 49\ ^{19}/_{32}$	1631634	2725058	1138968	0317015
DHP42410C	$46\ ^{5}/_{8} \times 53\ ^{19}/_{32}$	1631646	2725070	1138980	0317027
DHP4252C	$46\ ^{5}/_{8} \times 57\ ^{19}/_{32}$	1631635	2725059	1138969	0317016
DHP56310C	$62\ ^{5}/_{8} \times 45\ ^{19}/_{3}$	1631696	2725086	1138996	0317037
DHP5642C	$62\ ^{5}/_{8} \times 45\ ^{19}/_{32}$	1631640	2725064	1138974	0317021
DHP5646C	$62\ ^{5}/_{8} \times 49\ ^{19}/_{32}$	1631641	2725065	1138975	0317022
DHP56410C	$62\ ^{5}/_{8} \times 53\ ^{19}/_{32}$	1631697	2725087	1138997	0317038
DHP5652C	$62\ ^{5}/_{8} \times 57\ ^{19}/_{32}$	1631698	2725088	1138998	0317039
DHP5656C	$62\ ^{5}/_{8} \times 61\ ^{19}/_{32}$	1631699	2725089	1138999	0317040

Grilles

Interior Grill - Colonial / 3/4˝ Wood / Cottage / Prefinished Interior *(1996 – May 2010)*					
Unit No.	**Dimensions (w x h)**	**White**	**Unit No.**	**Dimensions (w x h)**	**White**
DHP30310C	32 15/16 × 41 19/32	1631670	**DHP410310C**	54 5/8 × 41 19/32	1631658
DHP3042C	32 15/16 × 45 19/32	1631671	**DHP41042C**	54 5/8 × 45 19/32	1631659
DHP3046C	32 15/16 × 49 19/32	1631672	**DHP41046C**	54 5/8 × 49 19/32	1631660
DHP30410C	32 15/16 × 53 19/32	1631676	**DHP410410C**	54 5/8 × 53 19/32	1631682
DHP3052C	32 15/16 × 57 19/32	1631673	**DHP41052C**	54 5/8 × 57 19/32	1631661
DHP3056C	32 15/16 × 61 19/32	1631677	**DHP41056C**	54 5/8 × 61 19/32	1631683
DHP310310C	42 5/8 × 41 19/32	1631648	**DHP42310C**	46 5/8 × 41 19/32	1631654
DHP31042C	42 5/8 × 45 19/32	1631649	**DHP4242C**	46 5/8 × 45 19/32	1631655
DHP31046C	42 5/8 × 49 19/32	1631650	**DHP4246C**	46 5/8 × 49 19/32	1631656
DHP310410C	42 5/8 × 53 19/32	1631666	**DHP42410C**	46 5/8 × 53 19/32	1631668
DHP31052C	42 5/8 × 57 19/32	1631651	**DHP4252C**	46 5/8 × 57 19/32	1631657
DHP34310C	36 15/16 × 41 19/32	1631678	**DHP56310C**	62 5/8 × 45 19/3	1631684
DHP3442C	36 15/16 × 45 19/32	1631674	**DHP5642C**	62 5/8 × 45 19/32	1631662
DHP3446C	36 15/16 × 49 19/32	1631675	**DHP5646C**	62 5/8 × 49 19/32	1631663
DHP34410C	36 15/16 × 53 19/32	1631679	**DHP56410C**	62 5/8 × 53 19/32	1631685
DHP3452C	36 15/16 × 57 19/32	1631680	**DHP5652C**	62 5/8 × 57 19/32	1631686
DHP3456C	36 15/16 × 61 19/32	1631681	**DHP5656C**	62 5/8 × 61 19/32	1631687

Fastener - Grille		
		Order No.
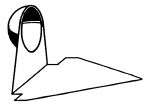		1974312

Frames

Frames

Note:
Frames are not available.

Stools

Stool Ref. No. 3 page 5

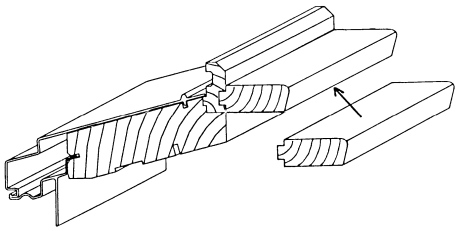

Unit No.	4 9/16″ Natural Wood	4 9/16″ White	6 9/16″ Natural Wood	6 9/16″ White
DHP10	1613667	1617767	1613748	1630867
DHP310	1613668	1617768	1613749	1630868
DHP30	1613664	1617764	1613754	1630864
DHP34	1613665	1617765	1613755	1630865
DHP42	1613671	1617771	1613758	1630871
DHP410	1613672	1617772	1613759	1630872
DHP56	1613673	1617773	1613760	1630873
DHP62	1613674	1617774	1613761	1630874

Glass Stops

Glass Stop - Head and Sill Ref. No. 4 page 5

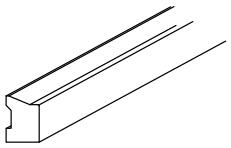

Unit No.	Natural Wood	White
DHP10	1686905	1687150
DHP30	1686910	1687155
DHP34	1686911	1687156
DHP310	1686913	1687158
DHP42	1686914	1687159
DHP410	1686915	1687160
DHP56	1686916	1687161

Glass Stop - Side Ref. No. 5 page 5

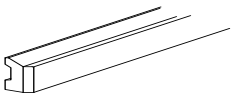

Unit No.	Natural Wood	White
DHP310	1686922	1687142
DHP42	1686923	1687143
DHP46	1686924	1687144
DHP410	1686928	1687162
DHP52	1686925	1687145
DHP56	1686926	1687146
DHP510	1686929	1687163
DHP62	1686927	1687147

Trim Stops

Inside Trim Stop - Head and Sill Ref. No. 6 page 5

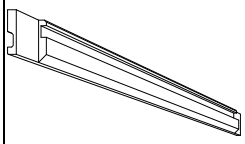

Unit No.	Natural Wood	Prefinished White	Prefinished Terratone®	Prefinished Sandtone	Prefinished Forest Green	Prefinished Canvas	Prefinished Dark Bronze
DHP10	1642209	1642239	1687015	1159027	1687017	9047288	9077125
DHP30	1642214	1642244	1687024	1159024	1687025	9047297	9077134
DHP34	1642215	1642245	1687026	1159025	1687027	9047298	9077135
DHP310	1642201	1642247	1687004	1166701	1687005	9047289	9077126
DHP42	1642202	1642248	1687006	1166702	1687007	9047290	9077127
DHP410	1642203	1642249	1687008	1166703	1687009	9047291	9077128
DHP56	1642204	1642250	1687010	1166704	1687011	9047292	9077129

Inside Trim Stop - Side Ref. No. 7 page 5

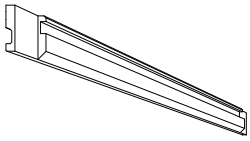

Unit No.	Natural Wood	Prefinished White	Prefinished Terratone®	Prefinished Sandtone	Prefinished Forest Green	Prefinished Canvas	Prefinished Dark Bronze
DHP310	1642222	1642232	1166721	1160132	1166724	9047304	9077139
DHP42	1642223	1642233	1166726	1160133	1166729	9047305	9077140
DHP46	1642224	1642234	1166731	1160134	1166734	9047306	9077141
DHP410	1642229	1642255	1166736	1160139	1166739	9047311	9077145
DHP52	1642225	1642235	1166741	1160135	1166744	9047307	9077142
DHP56	1642226	1642236	1166746	1160136	1166747	9047308	9077143
DHP510	1642219	1642256	1166748	1160141	1166749	9047312	9077146
DHP62	1642227	1642237	1166750	1160137	1166751	9047309	9077144

Inside Trim

Inside Trim - Sill Ref. No. 8 page 5

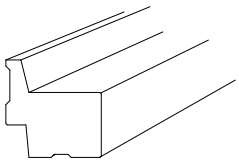

Unit No.	Dimensions	Natural Wood	White
DHP10	8 $^{53}/_{64}$	1630555	1630545
DHP30	34 $^{29}/_{64}$	1630556	1630546
DHP34	38 $^{29}/_{64}$	1630557	1630547
DHP310	44 $^{9}/_{64}$	1630558	1630548
DHP42	48 $^{9}/_{64}$	1630559	1630549
DHP410	56 $^{9}/_{64}$	1630560	1630550
DHP56	64 $^{9}/_{64}$	1630561	1630551

Frames

Extension Jambs

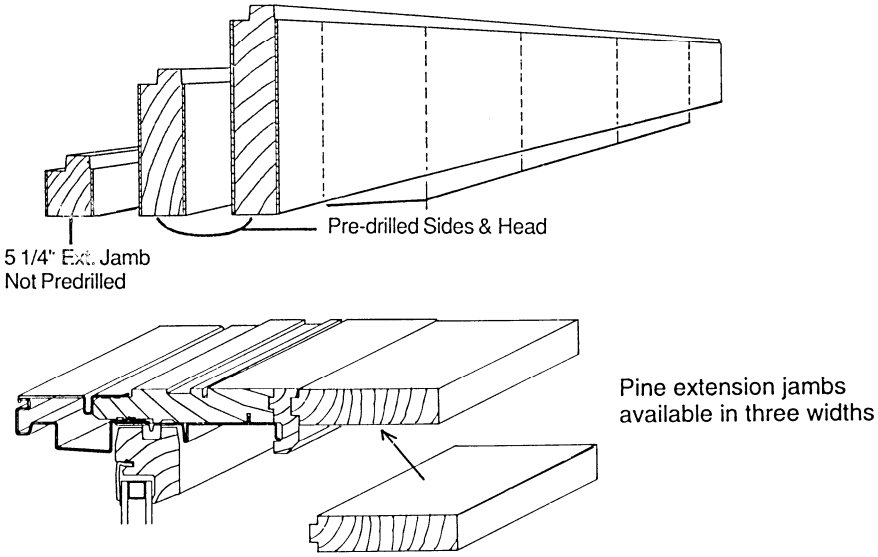

Double-Hung Picture and Sidelight Extension Jambs

Extension Jamb - Lineal								
		Natural Wood			Prefinished Interior White (Painted)			Vinyl Wrapped White
Unit No.	**Length**	**5 1/4″ Wall**	**6 9/16″ Wall**	**7 1/8″ Wall**	**5 1/4″ Wall**	**6 9/16″ Wall**	**7 1/8″ Wall**	**6 9/16″ Wall**
TW96	96	1636627	1636637	1636647	1694669	1694628	1694711	1636296
TW144	144	1636628	1636638	1636648	1694670	1694629	1694712	1636297

Extension Jamb - Head and Sill (Pair)								
		Natural Wood			Prefinished Interior White (Painted)			Vinyl Wrapped White
Unit No.	**Length**	**5 1/4″ Wall**	**6 9/16″ Wall**	**7 1/8″ Wall**	**5 1/4″ Wall**	**6 9/16″ Wall**	**7 1/8″ Wall**	**6 9/16″ Wall**
DHP10	12	1636653	1636649	1636651	1694671	1694630	1694713	1636298
DHP310	47 5/16	1636654	1636650	1636652	1694672	1694631	1694714	1636299
DHP42	51 5/16	1636621	1636631	1636641	1694663	1694622	1694705	1636290
DHP410	59 5/16	1636622	1636632	1636642	1694664	1694623	1694706	1636291
DHP56	67 5/16	1636623	1636633	1636643	1694665	1694624	1694707	1636292
DHP62	75 5/16	1636624	1636634	1636644	1694666	1694625	1694708	1636293

Frames

Extension Jamb - Side (Pair)

Unit No.	Length	Natural Wood			Prefinished Interior White (Painted)			Vinyl Wrapped White
		5 1/4″ Wall	6 9/16″ Wall	7 1/8″ Wall	5 1/4″ Wall	6 9/16″ Wall	7 1/8″ Wall	6 9/16″ Wall
TW310	45 1/4	1636122	1636222	1636322	1694647	1694606	1694688	1636272
TW42	49 1/4	1636123	1636223	1636323	1694648	1694607	1694689	1636273
TW46	53 1/4	1636124	1636224	1636324	1694649	1694608	1694690	1636274
TW410	57 1/4	1636142	1636215	1636315	1694643	1694602	1694684	1636268
TW52	61 1/4	1636125	1636225	1636325	1694650	1694609	1694691	1636275
TW56	65 1/4	1636126	1636226	1636326	1694651	1694610	1694692	1636276
TW510	69 1/4	1636143	1636217	1636317	1694644	1694603	1694685	1636269
TW62	73 1/4	1636127	1636227	1636327	1694652	1694611	1694693	1636277

Jamb Liners

Jamb Liner - Head Ref. No. 9 page 5

Unit No.	Dimensions	White	Gray
DHP10	10 3/8	1618301	2712501
DHP30	36	1618302	2712502
DHP310	45 11/16	1618304	2712504
DHP34	40	1618303	2712503
DHP410	57 11/16	1618306	2712506
DHP42	49 11/16	1618305	2712505
DHP56	65 11/16	1618307	2712507

Jamb Liner - Side Ref. No. 10 page 5

Unit No.	Dimensions	White	Gray
DHP310	44 3/64	1618310	2713710
DHP42	48 3/64	1618311	2713711
DHP46	52 3/64	1618312	2713712
DHP410	56 3/64	1682088	2773388
DHP52	60 3/64	1618313	2713713
DHP56	64 3/64	1618314	2713714
DHP510	68 3/64	1682089	2773389
DHP62	72 3/64	1618315	2713715

Frames

Flanges

Nailing Flange - Head and Sill Ref. No. 11 page 5

Unit No.	Order No.
DHP10	1625459
DHP310	1625467
DHP30 (TW30)	1625464
DHP34 (TW34)	1625465
DHP42	1625468
DHP410	1625469
DHP56	1625470

Nailing Flange - Side (Pair) Ref. No. 12 page 5

Unit No.	Order No.
DHP32	1635021
DHP310	1635023
DHP42	1635024
DHP46	1635025
DHP410	1635026
DHP52	1635027
DHP56	1635028
DHP510	1635029
DHP62	1635030

Frames

Inside Trim Kits

Inside Trim Kit

Kit Includes:
Inside head trim, side trim, installation/instruction guide

Unit No.	White Pl	Order No.	Unit No.	White Pl	Order No.
DHP10310	9033731	1644141	**DHP34510**	9033744	1644154
DHP10410	9033732	1644142	**DHP3452**	9033742	1644152
DHP1042	9033700	1644101	**DHP3456**	9033743	1644153
DHP1046	9033701	1644102	**DHP3462**	9033745	1644155
DHP1052	9033702	1644103	**DHP410310**	9033721	1644122
DHP1056	9033733	1644143	**DHP410410**	9033746	1644156
DHP10510	9033734	1644144	**DHP41042**	9033722	1644123
DHP1062	9033735	1644145	**DHP41046**	9033723	1644124
DHP30310	9033703	1644104	**DHP41052**	9033724	1644125
DHP30410	9033736	1644146	**DHP41056**	9033747	1644157
DHP3042	9033704	1644105	**DHP410510**	9033748	1644158
DHP3046	9033705	1644106	**DHP41062**	9033749	1644159
DHP3052	9033706	1644107	**DHP42310**	9033715	1644116
DHP3056	9033737	1644147	**DHP42410**	9033729	1644130
DHP30510	9033738	1644148	**DHP4242**	9033716	1644117
DHP3062	9033739	1644149	**DHP4246**	9033717	1644118
DHP310310	9033709	1644110	**DHP42510**	9033730	1644131
DHP310410	9033727	1644128	**DHP4252**	9033718	1644119
DHP31042	9033710	1644111	**DHP4256**	9033719	1644120
DHP31046	9033711	1644112	**DHP4262**	9033720	1644121
DHP310510	9033728	1644129	**DHP56310**	9033750	1644160
DHP31052	9033712	1644113	**DHP56410**	9033751	1644161
DHP31056	9033713	1644114	**DHP5642**	9033725	1644126
DHP31062	9033714	1644115	**DHP5646**	9033726	1644127
DHP34310	9033740	1644150	**DHP5652**	9033752	1644162
DHP34410	9033741	1644151	**DHP5656**	9033753	1644163
DHP3442	9033707	1644108	**DHP56510**	9033754	1644164
DHP3446	9033708	1644109	**DHP5662**	9033755	1644165

Frames

Stops - Trim Kits

Stop - Head Trim

Note:
Stop used as head jamb liner replacement.

Unit No.	Dimensions	White Pl	Order No.
DHP10	10 3/8	9033685	1679330
DHP30	36	9033686	1679331
DHP34	40	9033687	1679332
DHP310	45 11/16	9033688	1679333
DHP42	49 11/16	9033689	1679334
DHP410	57 11/16	9033690	1679335
DHP56	65 11/16	9033691	1679336

Stop - Side Trim

Note:
Stop used as side jamb liner replacement.

Unit No.	Dimensions	White Pl	Order No.
DHP310	43 9/16	9033692	1679338
DHP42	47 9/16	9033693	1679339
DHP46	51 9/16	9033694	1679340
DHP410	55 9/16	9033698	1679344
DHP52	59 9/16	9033695	1679341
DHP56	63 9/16	9033696	1679342
DHP510	67 9/16	9033699	1679345
DHP62	71 9/16	9033697	1679343

Stormwatch® Protection (Coastal Product)

Andersen® products with Stormwatch® protection are designed for use in coastal areas. They feature design pressure upgrades, glass options, and structural enhancements.

Glass

Glass Kits (Impact Resistant)

Glass Kit - Picture Window / High-Performance™ Low-E4® (Impact Resistant)

Unit No.	Order No.	Unit No.	Order No.	Unit No.	Order No.
DHP1042	1640130	**DHP34510**	By description	**DHP4256**	1640149
DHP1046	1640131	**DHP310310**	1640139	**DHP42510**	1640160
DHP10410	9051454	**DHP31042**	1640140	**DHP4262**	1640150
DHP1052	1640132	**DHP31046**	1640141	**DHP410310**	1640151
DHP10510	9051455	**DHP310410**	1640157	**DHP41042**	1640152
DHP30310	1640133	**DHP31052**	1640142	**DHP41046**	1640153
DHP3042	1640134	**DHP31056**	1640143	**DHP410410**	9051459
DHP3046	1640135	**DHP310510**	1640158	**DHP41052**	1640154
DHP30410	9051456	**DHP31062**	1640144	**DHP410510**	9051460
DHP3052	1640136	**DHP42310**	1640145	**DHP5642**	1640155
DHP30510	9051457	**DHP4242**	1640146	**DHP5646**	1640156
DHP3442	1640137	**DHP4246**	1640147	**DHP56410**	9051461
DHP3446	1640138	**DHP42410**	1640159	**DHP56510**	9051462
DHP34410	9051458	**DHP4252**	1640148		

Glass Kit - Picture Window / High-Performance™ Sun II (Impact Resistant)

Unit No.	Order No.	Unit No.	Order No.	Unit No.	Order No.
DHP1042	1640230	**DHP34510**	9051459	**DHP4256**	1640249
DHP1046	1640231	**DHP310310**	1640239	**DHP42510**	1640260
DHP10410	9051463	**DHP31042**	1640240	**DHP4262**	1640250
DHP1052	1640232	**DHP31046**	1640241	**DHP410310**	1640251
DHP10510	9051464	**DHP310410**	1640257	**DHP41042**	1640252
DHP30310	1640233	**DHP31052**	1640242	**DHP41046**	1640253
DHP3042	1640234	**DHP31056**	1640243	**DHP410410**	9051469
DHP3046	1640235	**DHP310510**	1640258	**DHP41052**	1640254
DHP30410	9051465	**DHP31062**	1640244	**DHP410510**	9051470
DHP3052	1640236	**DHP42310**	1640245	**DHP5642**	1640255
DHP30510	9051466	**DHP4242**	1640246	**DHP5646**	1640256
DHP3442	1640237	**DHP4246**	1640247	**DHP56410**	9051471
DHP3446	1640238	**DHP42410**	1640259	**DHP56510**	9051472
DHP34410	9051467	**DHP4252**	1640248		

Glass

Glass Kit - Picture Window / High-Performance™ Low-E4® Tempered (Impact Resistant)					
Unit No.	**Order No.**	**Unit No.**	**Order No.**	**Unit No.**	**Order No.**
DHP1042	1640161	**DHP34510**	9051478	**DHP4256**	1640180
DHP1046	1640162	**DHP310310**	1640170	**DHP42510**	9051482
DHP10410	9051473	**DHP31042**	1640171	**DHP4262**	1640181
DHP1052	1640163	**DHP31046**	1640172	**DHP410310**	1640182
DHP10510	9051474	**DHP310410**	9051479	**DHP41042**	1640183
DHP30310	1640164	**DHP31052**	1640173	**DHP41046**	1640184
DHP3042	1640165	**DHP31056**	1640174	**DHP410410**	9051483
DHP3046	1640166	**DHP310510**	9051480	**DHP41052**	1640185
DHP30410	9051475	**DHP31062**	1640175	**DHP410510**	9051484
DHP3052	1640167	**DHP42310**	1640176	**DHP5642**	1640186
DHP30510	9051476	**DHP4242**	1640177	**DHP5646**	1640187
DHP3442	1640168	**DHP4246**	1640178	**DHP56410**	9051485
DHP3446	1640169	**DHP42410**	9051481	**DHP56510**	9051486
DHP34410	9051477	**DHP4252**	1640179		

Glass Kit - Picture Window / High-Performance™ Sun II Tempered (Impact Resistant)					
Unit No.	**Order No.**	**Unit No.**	**Order No.**	**Unit No.**	**Order No.**
DHP1042	1640261	**DHP34510**	9051492	**DHP4256**	1640280
DHP1046	1640262	**DHP310310**	1640270	**DHP42510**	9051496
DHP10410	9051487	**DHP31042**	1640271	**DHP4262**	1640281
DHP1052	1640263	**DHP31046**	1640272	**DHP410310**	1640282
DHP10510	9051488	**DHP310410**	9051493	**DHP41042**	1640283
DHP30310	1640264	**DHP31052**	1640273	**DHP41046**	1640284
DHP3042	1640265	**DHP31056**	1640274	**DHP410410**	9051497
DHP3046	1640266	**DHP310510**	9051494	**DHP41052**	1640285
DHP30410	9051489	**DHP31062**	1640275	**DHP410510**	9051498
DHP3052	1640267	**DHP42310**	1640276	**DHP5642**	1640286
DHP30510	9051490	**DHP4242**	1640277	**DHP5646**	1640287
DHP3442	1640268	**DHP4246**	1640278	**DHP56410**	9051499
DHP3446	1640269	**DHP42410**	9051495	**DHP56510**	9051500
DHP34410	9051491	**DHP4252**	1640279		

Glass Kit - Sidelight Window (Impact Resistant)
Note: Impact resistant glass for sidelight windows is available. Order by description.

Glass Stop Kits

Glass Stop Kit - Natural Wood Interior (Impact Resistant)

Unit No.	Order No.	Unit No.	Order No.	Unit No.	Order No.
DHP10310	1644232	**DHP34410**	1644242	**DHP42510**	1644231
DHP1042	1644201	**DHP3452**	1644243	**DHP4262**	1644221
DHP1046	1644202	**DHP3456**	1644244	**DHP410310**	1644222
DHP10410	1644233	**DHP34510**	1644245	**DHP41042**	1644223
DHP1052	1644203	**DHP3462**	1644246	**DHP41046**	1644224
DHP1056	1644234	**DHP310310**	1644210	**DHP410410**	1644247
DHP10510	1644235	**DHP31042**	1644211	**DHP41052**	1644225
DHP1062	1644236	**DHP31046**	1644212	**DHP41056**	1644248
DHP30310	1644204	**DHP310410**	1644228	**DHP410510**	1644249
DHP3042	1644205	**DHP31052**	1644213	**DHP41062**	1644250
DHP3046	1644206	**DHP31056**	1644214	**DHP56310**	1644251
DHP30410	1644237	**DHP310510**	1644229	**DHP5642**	1644226
DHP3052	1644207	**DHP31062**	1644215	**DHP5646**	1644227
DHP3056	1644238	**DHP42310**	1644216	**DHP56410**	1644252
DHP30510	1644239	**DHP4242**	1644217	**DHP5652**	1644253
DHP3062	1644240	**DHP4246**	1644218	**DHP5656**	1644254
DHP34310	1644241	**DHP42410**	1644230	**DHP56510**	1644255
DHP3442	1644208	**DHP4252**	1644219	**DHP5662**	1644256
DHP3446	1644209	**DHP4256**	1644220		

Glass Stop Kit - Prefinished Interior (Impact Resistant)

Unit No.	Order No.	Unit No.	Order No.	Unit No.	Order No.
DHP10310	1644332	**DHP34410**	1644342	**DHP42510**	1644331
DHP1042	1644301	**DHP3452**	1644343	**DHP4262**	1644321
DHP1046	1644302	**DHP3456**	1644344	**DHP410310**	1644322
DHP10410	1644333	**DHP34510**	1644345	**DHP41042**	1644323
DHP1052	1644303	**DHP3462**	1644346	**DHP41046**	1644324
DHP1056	1644334	**DHP310310**	1644310	**DHP410410**	1644347
DHP10510	1644335	**DHP31042**	1644311	**DHP41052**	1644325
DHP1062	1644336	**DHP31046**	1644312	**DHP41056**	1644348
DHP30310	1644304	**DHP310410**	1644328	**DHP410510**	1644349
DHP3042	1644305	**DHP31052**	1644313	**DHP41062**	1644350
DHP3046	1644306	**DHP31056**	1644314	**DHP56310**	1644351
DHP30410	1644337	**DHP310510**	1644329	**DHP5642**	1644326
DHP3052	1644307	**DHP31062**	1644315	**DHP5646**	1644327
DHP3056	1644338	**DHP42310**	1644316	**DHP56410**	1644352
DHP30510	1644339	**DHP4242**	1644317	**DHP5652**	1644353
DHP3062	1644340	**DHP4246**	1644318	**DHP5656**	1644354
DHP34310	1644341	**DHP42410**	1644330	**DHP56510**	1644355
DHP3442	1644308	**DHP4252**	1644319	**DHP5662**	1644356
DHP3446	1644309	**DHP4256**	1644320		

Frames

Installation Kits

Installation Kit - Picture Window		
	Kit includes: 18 clips, 28 clip screws	**Order No.** 1611987

Service Replacement

Service Replacement Only Parts

Cartons

Note:
Ship via van only.

Cartons - Unit

Unit No.	Order No.	Unit No.	Order No.	Unit No.	Order No.
DHP1046	4687552	**DHP41042**	4687572	**DHP31056**	9044197
DHP1052	4687553	**DHP41046**	4687573	**DHP310510**	9044198
DHP1062	4687554	**DHP41052**	4687574	**DHP42410**	9044199
DHP310310	4687561	**DHP41062**	4687575	**DHP4256**	9044200
DHP31042	4687562	**DHP5642**	4687576	**DHP42510**	9044201
DHP31046	4687563	**DHP5646**	4687577	**DHP410410**	9044202
DHP31052	4687564	**DHP5662**	4687578	**DHP41056**	9044203
DHP31062	4687565	**DHP10310**	9044191	**DHP410510**	9044204
DHP42310	4687566	**DHP1042**	9044192	**DHP56310**	9044205
DHP4242	4687567	**DHP10410**	9044193	**DHP56410**	9044206
DHP4246	4687568	**DHP1056**	9044194	**DHP5652**	9044207
DHP4252	4687569	**DHP10510**	9044195	**DHP5656**	9044208
DHP4262	4687570	**DHP310410**	9044196	**DHP56510**	9044209
DHP410310	4687571				

Notes