Interior Trim Options

Extension jamb and drywall return bead applications shown.

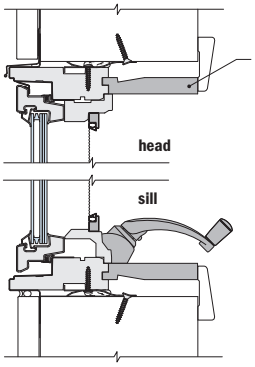

Extension Jamb

Available for a variety of wall depths.

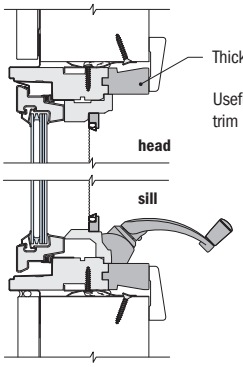

Thick Replacement Extension Jamb

Useful when alignment with existing trim and paint lines is desired.

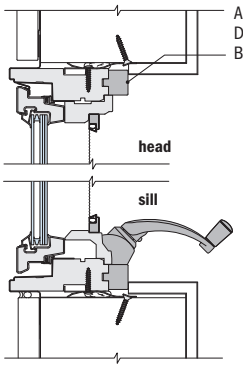

Andersen® Wide Drywall Return Bead

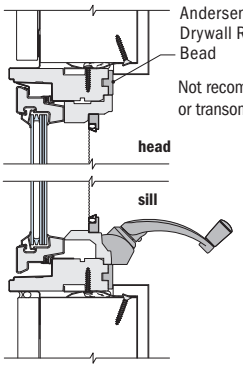

Andersen® Narrow Drywall Return Bead

Not recommended for picture or transom windows.

Casement Window Details

Scale 1½" (38) = 1'-0" (305) – 1:8

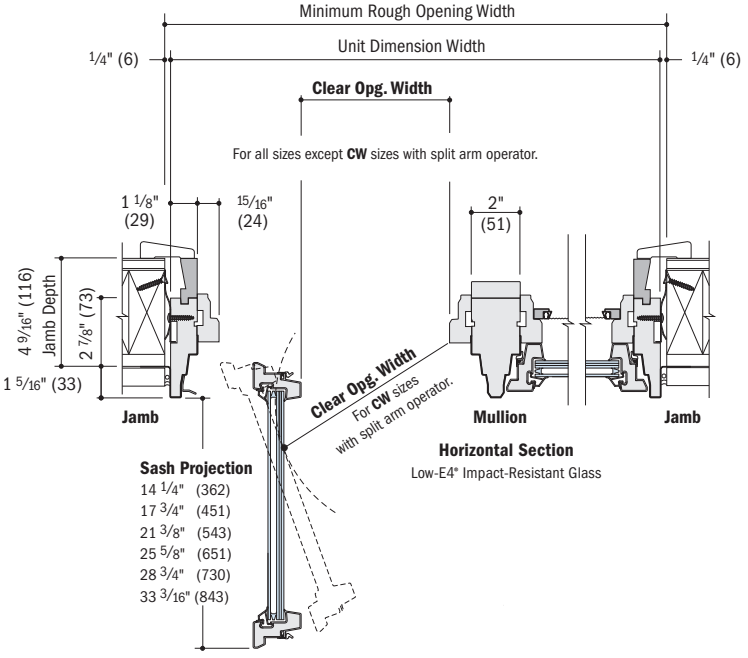

Horizontal Section
Low-E4® Impact-Resistant Glass

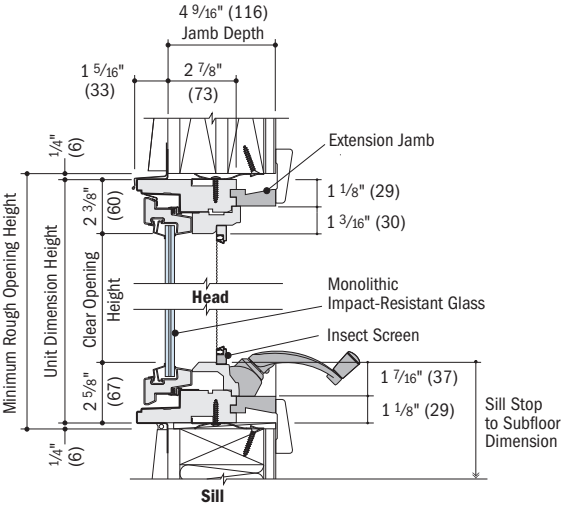

Vertical Section
Monolithic SmartSun™ Impact-Resistant Glass

- 4 9/16" (116) overall jamb depth and 2 7/8" (73) base jamb depth measurements are from back side of installation flange.
- Light-colored areas are parts included with window. Dark-colored areas are additional Andersen® parts required to complete window assembly as shown.
- Dimensions in parentheses are in millimeters.
- **Minimum rough opening dimensions may need to be increased to allow for use of building wraps, flashing, sill panning, brackets, fasteners or other items.**
- Details are for illustration only and are not intended to represent product installation methods or materials. Refer to product installation guides at andersenwindows.com.

Awning Window Details

Scale 1½" (38) = 1'-0" (305) – 1:8

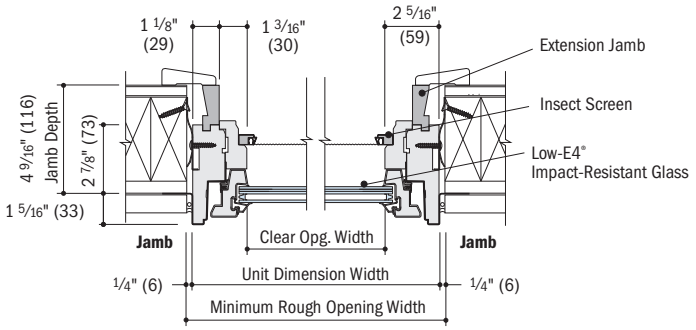

Horizontal Section
Low-E4® Impact-Resistant Glass

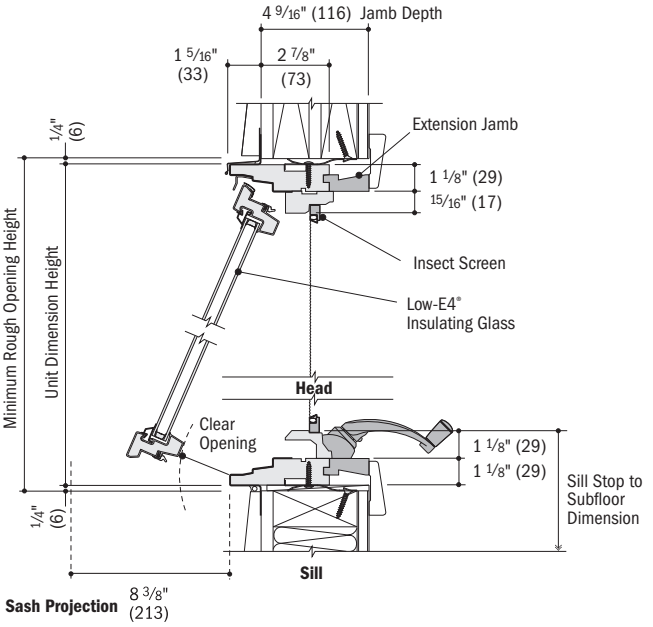

Vertical Section
PG Upgrade with Low-E4® Glass

Picture and Transom Window Details

Scale 1½" (38) = 1'-0" (305) – 1:8

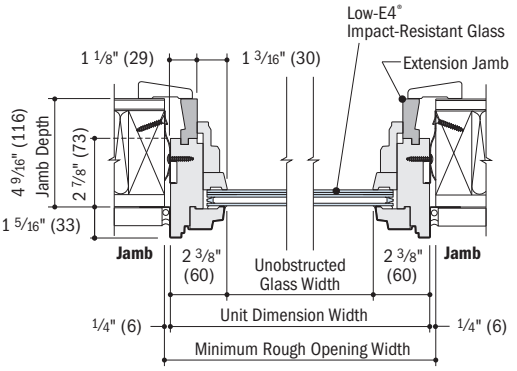

Horizontal Section
Low-E4® Impact-Resistant Glass

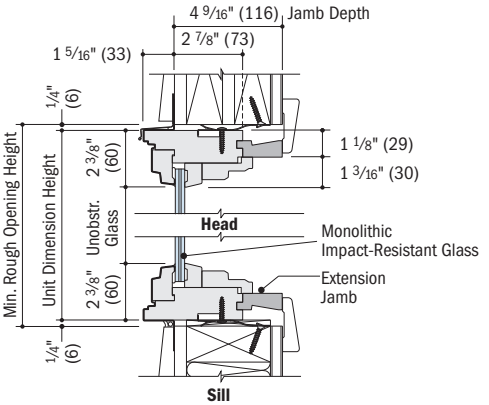

Vertical Section
Monolithic SmartSun™ Impact-Resistant Glass

- 4 9/16" (116) overall jamb depth and 2 7/8" (73) base jamb depth measurements are from back side of installation flange.
- Light-colored areas are parts included with window. Dark-colored areas are additional Andersen® parts required to complete window assembly as shown.
- Dimensions in parentheses are in millimeters.
- **Minimum rough opening dimensions may need to be increased to allow for use of building wraps, flashing, sill panning, brackets, fasteners or other items.**
- Details are for illustration only and are not intended to represent product installation methods or materials. Refer to product installation guides at andersenwindows.com.