Installation Guide

for Andersen® Architectural Clad Hinged Windows

Andersen®
architectural
windows and
doors

INSTALLER: Please leave this guide with the building owner to file for future reference.

Congratulations! You have just purchased one of the many fine Andersen® products. Proper assembly, installation and maintenance are essential if the benefits of your Andersen product are to be fully attained. Therefore, please read and follow this instruction guide completely. If your abilities do not match this procedure's requirements, contact an experienced contractor. You may direct any questions about this or other products to your local Andersen dealer, found in the Yellow Pages under "Windows" or call Andersen WindowCare® service center at 1-888-888-7020 Monday through Friday, 7 a.m. to 7 p.m. Central Time and Saturday, 8 a.m. to 4 p.m. Central Time. Thank you for choosing Andersen.

Important Safety, Assembly, and Installation Information

Every assembly and installation is different (windloads, structural support, etc.). Andersen strongly recommends consultation with an Andersen supplier or an experienced contractor, architect, or structural engineer prior to the assembly and installation of any Andersen product. Andersen has no responsibility in regard to the post-manufactured assembly and installation of Andersen products.

⚠ WARNING

Use caution when working at elevated heights and around unit openings. Follow manufacturer's instructions for safe use of ladders and/or scaffolding. Failure to do so may result in injury or death.

⚠ WARNING

Follow manufacturer's instructions for hand and power tools. Always wear safety glasses. Failure to do so may result in injury or product damage.

⚠ WARNING

Windows and doors can be heavy. Use safe lifting techniques and a reasonable number of people with enough strength to lift, carry and install window and door products to avoid injury and/or product damage.

⚠ WARNING

Unless specifically ordered, Andersen windows are not equipped with safety glass, and if broken, could fragment causing injury. Many laws and building codes require safety glass in locations adjacent to or near doors. Andersen windows are available with safety glass that may reduce the likelihood of injury when broken. Information on safety glass is available from your local Andersen dealer.

⚠ CAUTION

- Factory supplied Head Flashing and Installation Flanges **DO NOT** take the place of standard window and door flashing. Unit must be properly flashed and sealed with silicone for protection against water and air infiltration. Use non-reflective flashings.
- Do not apply any type of film to glass. Thermal stress conditions resulting in glass damage could occur.
- Use of movable insulating materials such as window coverings, shutters, and other shading devices may damage glass and/or vinyl. In addition, excessive condensation may result causing deterioration of windows and doors.

"Andersen" is a registered trademark of Andersen Corporation. All other marks where denoted are trade marks of Andersen Corporation.
©2009 Andersen Corporation. All rights reserved.

Instruction Guide **105419 M** Revised 09/02/09

⚠ WARNING

Metal fasteners and other hardware components may corrode when exposed to preservative treated and fire-retardant treated lumber. Obtain and use the appropriate metal fasteners and hardware as called out by the installation guide to fasten unit to any rough opening made from pressure treated and fire-retardant treated lumber. Failure to use the appropriate materials for the installation may cause a failure resulting in injury, property or product damage.

⚠ WARNING

Do not carry or lift unit by extension jambs. Doing so may result in injury, product or property damage.

CAUTION

Follow instructions from foam, sealant and flashing manufacturer regarding material application and compatibility with this product.

Parts Included
(1) Installation Guide
(1) Window Unit
(1) Screw Pack
(4-6) Corner Gaskets
(1) Insect Screen

Supplies Needed
- Formable Self-adhering Sill Flashing
- Flashing
- House Wrap Tape
- Sealant
- Foam Backer Rod
- Shims (waterproof)
- Low Expanding Foam
- Drip Cap (full width)
- Staples
- Fasteners (use Stainless Steel if required)
  - #10 x 1 ½" Screws
  - 1 ¾" Roofing Nails
  - #10 x 3" Screws

Tools Needed
- Safety Glasses
- Tape Measure
- Level
- Hammer
- Utility Knife
- Drill/Driver
- #2 Phillips Bit
- 7/64" Hex Wrench
- 7/16" Wrench
- Caulk Gun
- Staple Gun
- 3/16" Drill Bit

Glass

⚠ WARNING

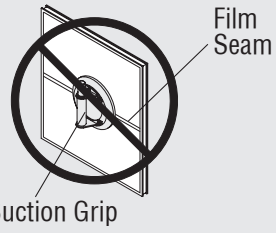

Suction grips will not hold if placed over seam of film to lift or move unit. Unit will fall causing damage or injury.

CAUTION

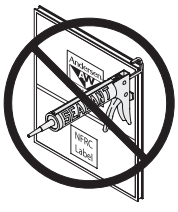

Sealants will damage exterior coating on glass.

- Laminated safety glass is not standard and must be special ordered. Check local building codes.
- Leave protective film in place until after construction is finished. Leave (NFRC) performance label in place until final inspection.
- Argon gas blend not available with high altitude glass.

Film Removal

⚠ WARNING

Static created when removing film can ignite flammable materials or cause a shock.

See warning label on glass.

⚠ WARNING

Dispose of film immediately after removal. Film may pose suffocation hazard to children.

- Remove protective film from seam or corner using plastic scraper if needed.
- Remove protective film within nine months of installation and when temperature is above 32° F.

Cleaning

CAUTION

Acid solutions used for cleaning masonry or concrete will damage glass, fasteners, hardware, and metal flashing. Protect unit and follow cleaning product instructions carefully. If acid contacts unit, wash all surfaces with water immediately.

- Clean glass using liquid glass cleaner.
- Clean exterior frame, sash and insect screens using mild detergent and water with a soft cloth or brush.
- For hard to clean areas use a nonabrasive cleaner, alcohol-and-water or ammonia-and-water.

CAUTION

Abrasive cleaners will damage glass surface.

CAUTION

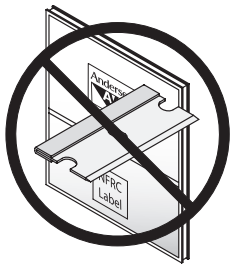

Metal razor blades can damage glass surface and exterior coating.

Maintenance

- Do not apply any type of film to insulated glass. Thermal stress and glass damage can result. Shading devices (insulated covers, shutters, etc.) may also cause thermal stress and condensation damage.
- For more information contact your local Andersen dealer or visit www.andersenwindows.com.

Finishing

CAUTION

Finish wood surfaces immediately after installation. Unfinished wood will deteriorate, discolor, and/or may bow and split.
Do not stain or paint weatherstrip, vinyl, glass, or hardware. Product damage may occur.

- Apply interior casing to complete installation.
- Finish all hidden wood surfaces
- Do not overload brush with stain/paint when finishing.
  Finish may wick between glass stop/grille on glass.
- **Read and follow finishing product instructions and warnings on finishing materials.**
- Film is not a substitute for masking.

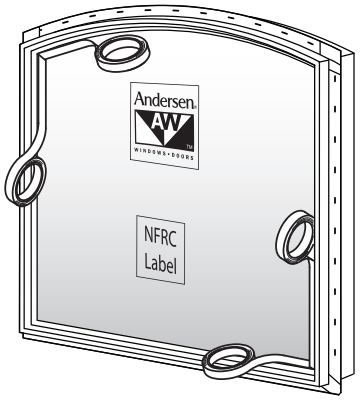

1. Unit Preparation

CAUTION

DO NOT unlock or open unit until secured in opening. Twisted frame may result causing product performance problems.

- Remove unit from packaging being careful not to cause damage. Place unit interior side up on clean, flat work surface.
  Remove insect screen and set aside.

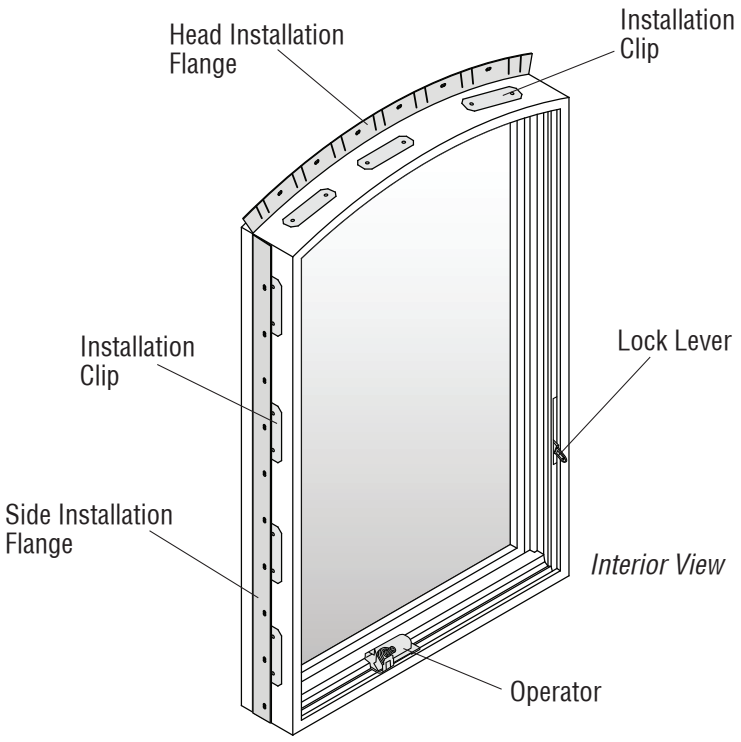

2. Prepare Rough Opening

- Size of rough opening should allow minimum ¼" clearance around entire unit, between unit frame and rough opening. Width of rough opening should be ½" more than unit width. Height of rough opening should be ½" more than unit height. Allow for flashing thickness.
- Check rough opening for square by measuring diagonally, upper left to lower right and upper right to lower left corner. If measurements are within 1/8", opening is square. If rough opening is not square, adjust as needed.
- Check for plumb and level of rough opening using a level. Sill plate must be level. If rough opening is not plumb and level, adjust as needed.

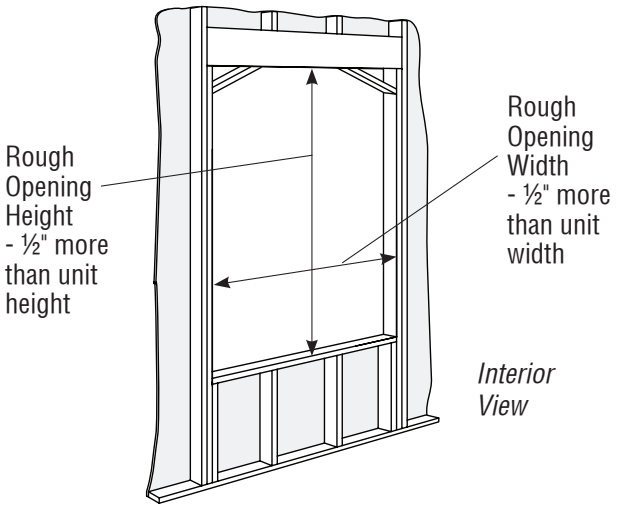

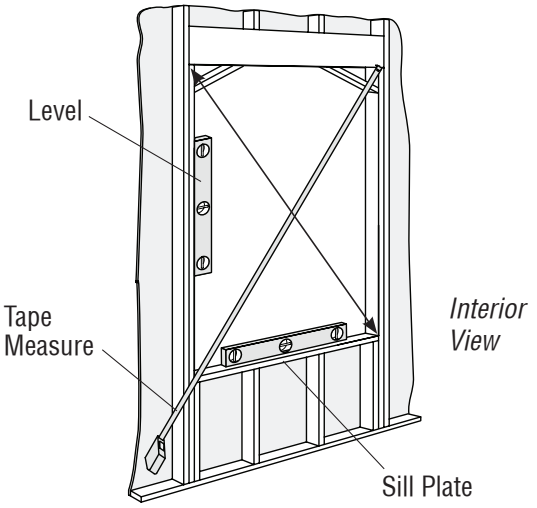

Masonry Construction

CAUTION

DO NOT install unit with unfinished wood in direct contact with masonry/concrete. Apply proper finish to wood surface, or place barrier (i.e. tar paper or ice/water membrane) between wood and masonry/concrete surface. Failure to do so may result in product and/or property damage.

NOTICE

For masonry applications, install and securely fasten a wood buck around masonry opening before installing the window.

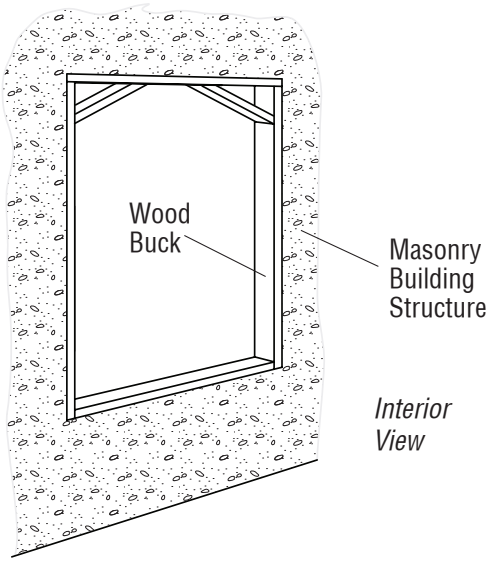

2. Prepare Rough Opening (continued)

- Cut house wrap along sill and head of rough opening.
- Cut house wrap vertically in center of rough opening from head to sill.
- Fold house wrap around to inside, trim and staple.
- Cut top corners of house wrap on 45° angles the width of head flashing. For arch top and Springline™ units, cut top corners on 45° angle for 8" to 10" then cut straight up until the cuts are the width of the head flashing above the unit.
- Fold flap up and temporarily tape in position.
- Apply sill flashing on rough opening sill. Keep sill flashing 6" above sill at sides and 2" to 3" onto house wrap around exterior.
- Secure corners of sill flashing by stapling, taping or nailing in position. Stapling shown.

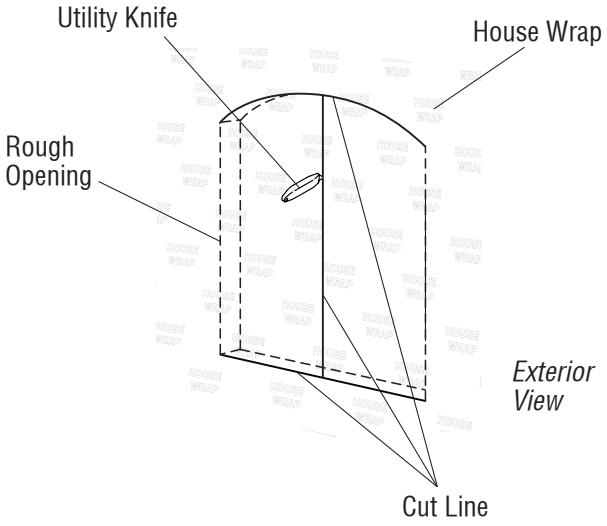

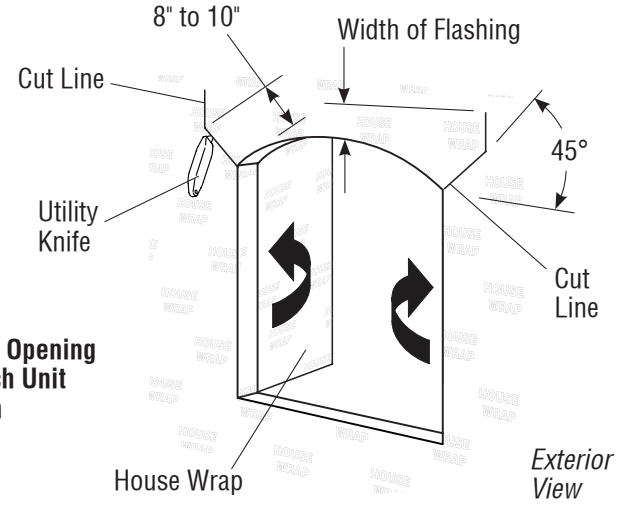

Rough Opening for Arch Unit Shown

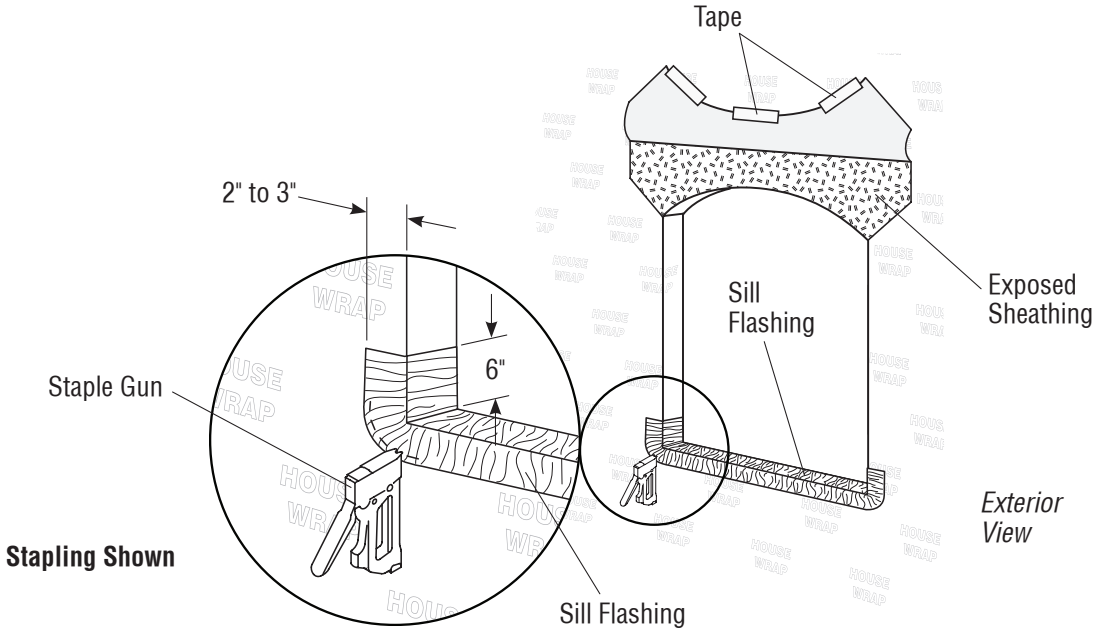

Stapling Shown

3. Apply Corner Gaskets

NOTICE

Installation Flanges are recommended for installing all units. If Installation Flanges cannot be used, for example, replacement situations where exterior finish is already applied, remove them and proceed to **Step 4**.

- Lift *Installation Flanges* from unit frame and snap into position perpendicular to frame. Not required on curved frame section(s).

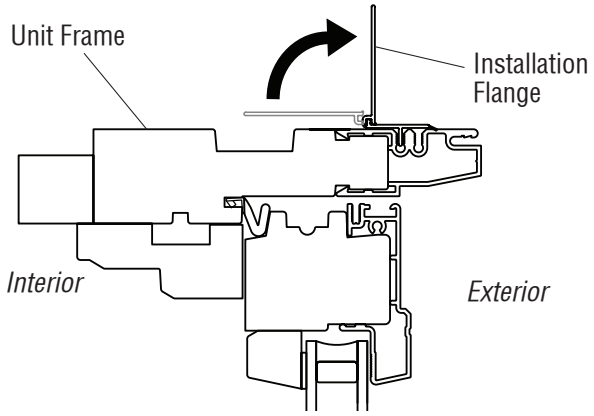

90° Corners

- Remove backer from 90° corner gaskets and adhere to adjacent *Installation Flanges* from exterior. See drawing.
- Apply sealant between corner gaskets and base of *Installation Flange.* See drawing.

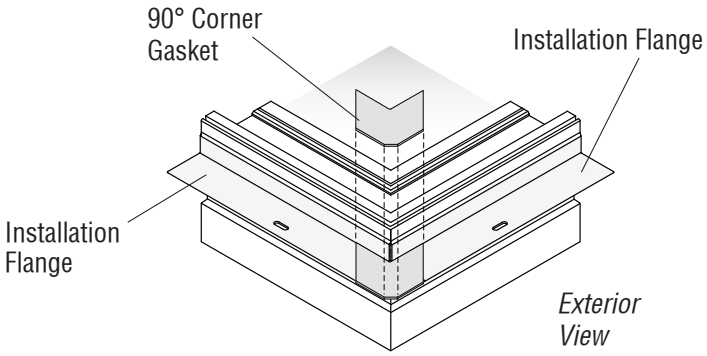

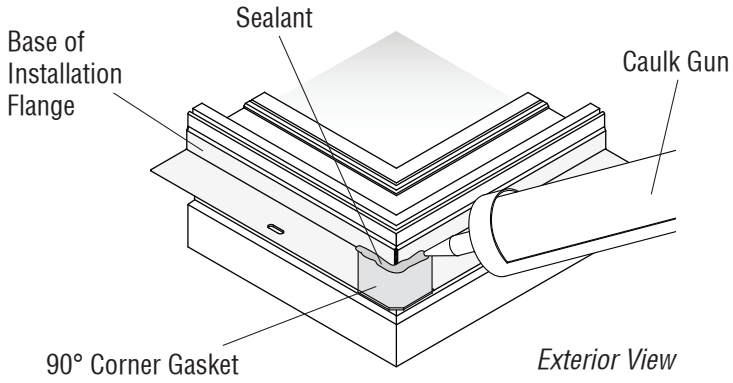

Non-90° Corners

- Remove backer from straight corner gaskets.
- Adhere first straight corner gasket to side jamb *Installation Flange* extending half the gasket between head and side *Installation Flanges* from exterior.
- Adhere second straight corner gasket to head *Installation Flange* overlapping onto first straight corner gasket from exterior.
- Apply sealant between corner gaskets and base of *Installation Flange*.

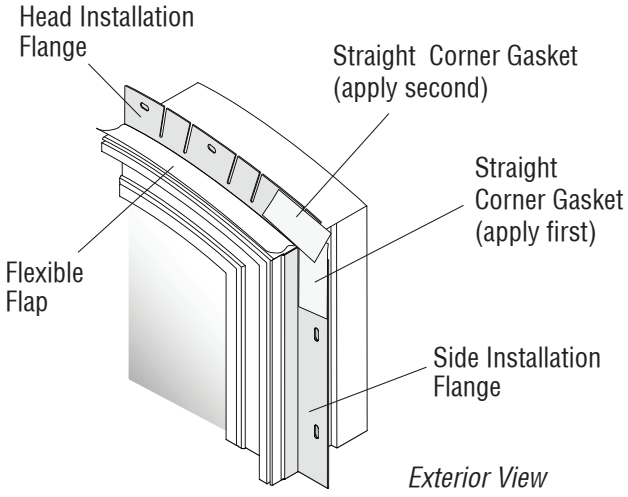

4. Position Installation Clips

- Rotate *Installation Clips* 90º into position around frame, as shown, before placing unit into rough opening.
- For Springline™ and arch units, relocate *Installation Clips* on radius head jamb for securing to building framing as needed.

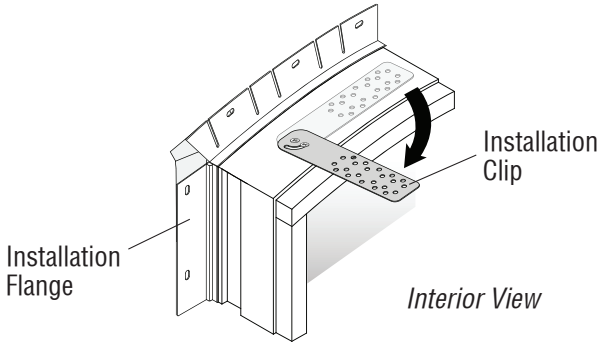

5. Install Unit

⚠ WARNING

Windows and doors can be heavy. Use safe lifting techniques and a reasonable number of people with enough strength to lift, carry and install window and door products to avoid injury and/or product damage.

CAUTION

A minimum space of ¼" is required around exterior perimeter of unit between frame and rough opening.

CAUTION

Follow sealant manufacturer's instructions regarding surface cleaning and preparation, application, and temperature when applying sealant. Failure to do so may result in water infiltration.

- Apply a 3/8" bead of sealant to back of *Installation Flanges* at sides and head only. **Do Not** apply sealant to sill *Installation Flange*. Apply extra sealant at corners.
- Set and level shims on sill plate at all side jamb locations. Add shims on sill plate to support and level unit as needed. For joined units, shims must be placed under mullion post(s) at the sill.
- Lift unit into rough opening from the exterior.
- Center and level unit in opening.
- Bend and fasten *Installation Clip* at highest point using a #10 x 1 ½" screw. For rectangular and arch units, fasten one corner. For Springline™ units, secure at top of unit.

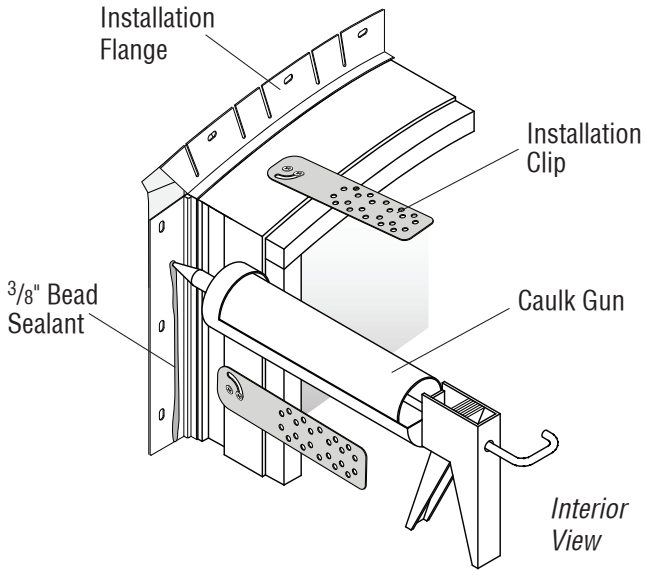

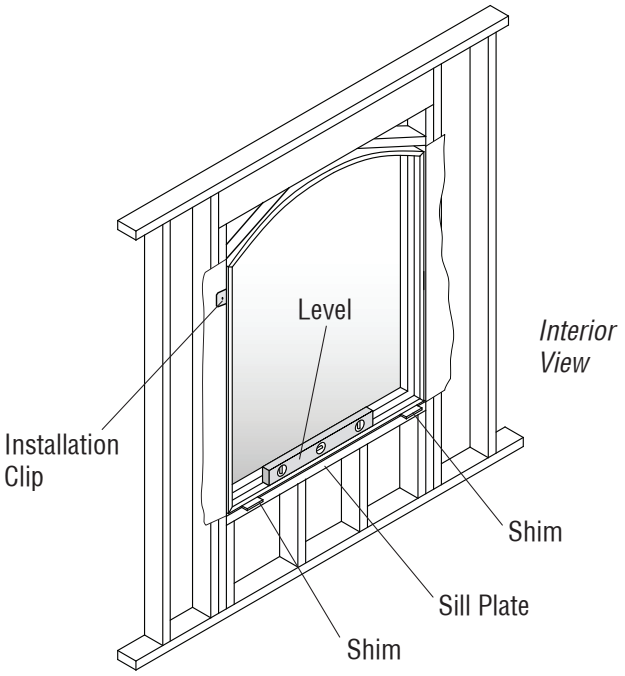

Arch Unit Shown

6. Secure Unit in Opening

NOTICE

Both Installation Clips and Installation Flanges are recommended for installing all units. If Installation Clips or Installation Flanges cannot be used, unit must also be secured to building structure through frame.

- Insert shims between frame and rough opening along side jambs, just above or below *Installation Clips*.
- Check that unit is plumb and level. Adjust shims as needed.
- Check unit for square by measuring diagonally, upper left to lower right and upper right to lower left corner. Both measurements must be within 1/8". If unit is not square, adjust as needed.
- Nail through every other hole around *Installation Flange* using 1 ¾" roofing nails. Hold flexible flap against *Head Installation Flange* before securing *Head Installation Flange*. Extra nails may be needed around head to keep flexible flap tight to *Head Installation Flange*.
- Bend and fasten *Installation Clips* to building structure using #10 x 1 ½" screws.
- Recheck plumb, level, and square of unit. Adjust shims as needed.

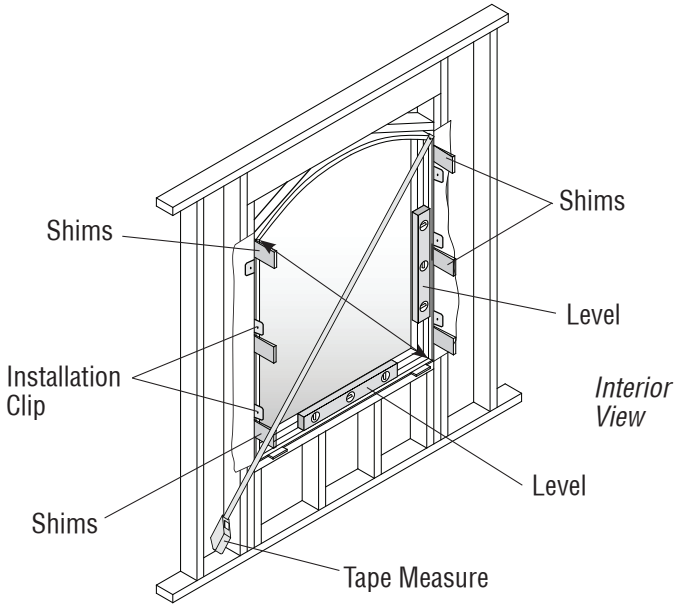

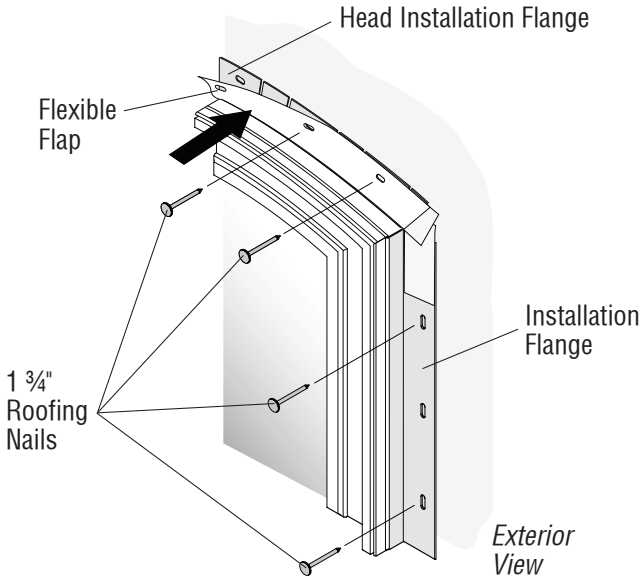

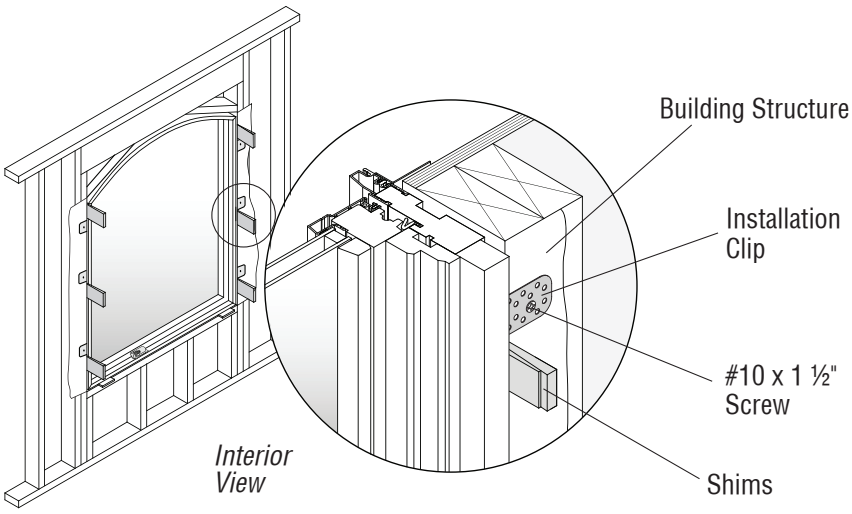

6. Secure Unit In Opening (continued)

Securing Through Frame

NOTICE

Units must be secured in opening through Installation Flanges and Installation Clips. If not able to secure unit using both, unit should be secured through the frame.

If not securing unit through frame proceed to **Step 7.**

- Counterbore 3/8" holes through side jamb *Sash Stops,* 9/16" deep, 4" from each corner and every 12" between.
- Predrill 3/16" holes through side jambs through counterbored holes in *Sash Stops*.
- Insert shims between frame and rough opening behind 3/16" holes.
- Fasten through predrilled holes in frame using #10 x 3" screws. **Do Not** distort frame by overtightening screws.
- Check plumb, level and square of unit. Correct as needed.
- Fill holes in *Sash Stops* with 3/8" wood plugs.
- If securing directly to masonry, predrill and use masonry screws.

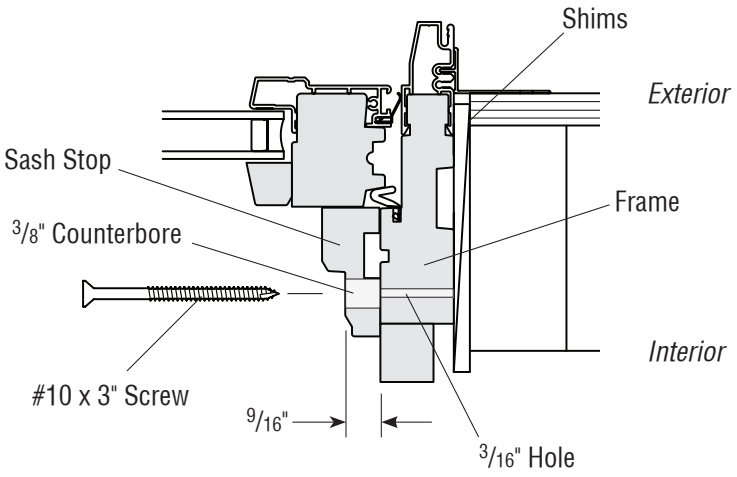

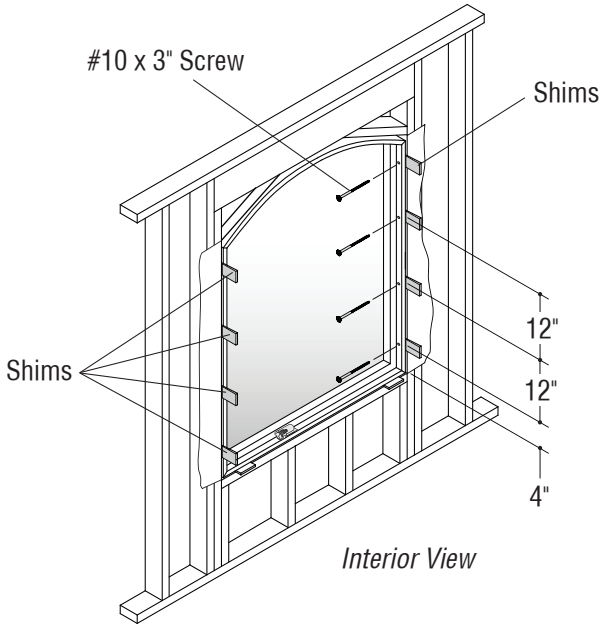

7. Check Clearance and Operation

Units with Butt Hinges

- Install supplied (from screw pack) temporary operator and lock handles.
- Open sash completely and remove sash spacer blocks from around sash.
- Secure hinges with supplied (from screw pack) #10 × 2 ½" screws where labeled.
- Determine if clearance and operation are correct by opening and closing sash. If clearance and/or operation are not correct, adjust shims and tighten #10 × 2 ½" screws to adjust sash in opening as required.

For French Casements proceed to **Operation and Adjustment Guide for Clad French Casement Windows #106145**

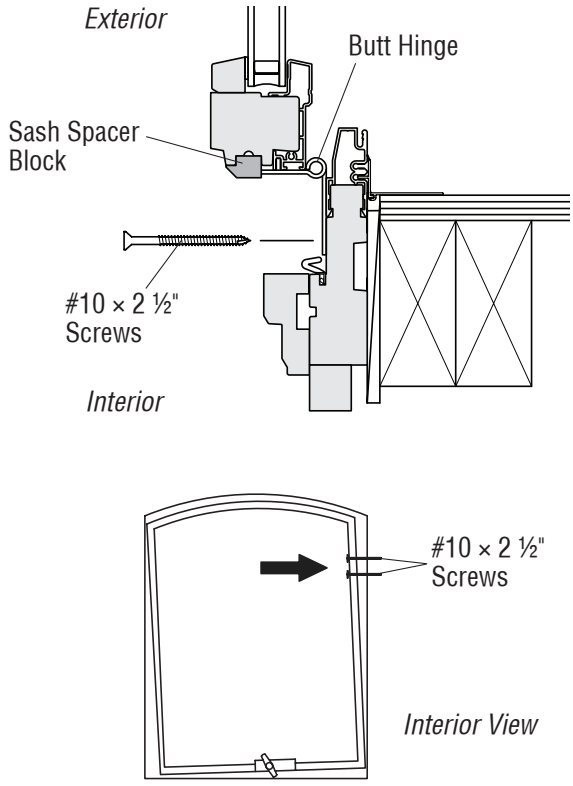

Units with Butt Hinges

Units with Concealed Hinges

NOTICE

To raise sash, turn pivot stud away from sash on bottom hinge and towards sash on top hinges.

NOTICE

Install permanent hardware as directed by supplied instructions after all construction has been completed.

- Install temporary operator and lock handles.
- Open sash completely and remove sash spacer blocks from around sash.
- Determine if clearance and operation are correct. If clearance and/or operation are not correct, adjust sash by turning pivot stud on bottom hinge. (Use $^{7}/_{16}$" wrench or $^{7}/_{64}$" hex wrench to adjust pivot stud.)
- Recheck clearance and operation. If clearance and/or operation are still not correct, repeat for top hinge.

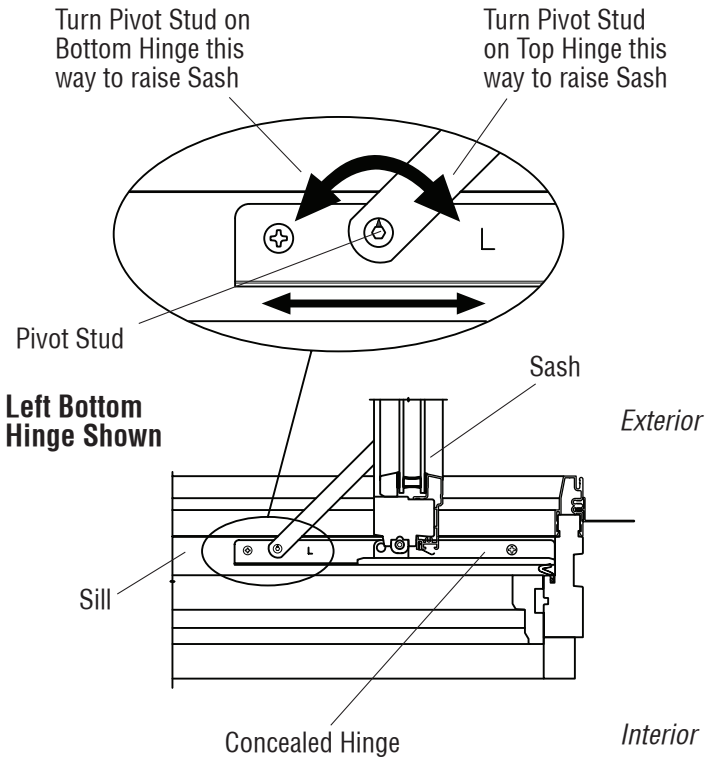

Units with Concealed Hinges - Top View

8. Insulate Around Unit

CAUTION

When insulating between the unit frame and rough opening, or between units when joining, **DO NOT** overpack batt insulation or overfill with expandable foam. Bowed jambs will result affecting product performance and/or proper operation of unit.

NOTICE

Do not completely fill void at sill to allow for drainage.

- Cut shims flush with frame interior.
- Insulate between frame, extension jambs, and rough opening on all sides. **DO NOT** overpack batt insulation or overfill with expandable foam; bowed frame may result.
- Seal gap between frame and rough opening with backer rod and sealant from interior if not insulating or insulating with batt insulation.

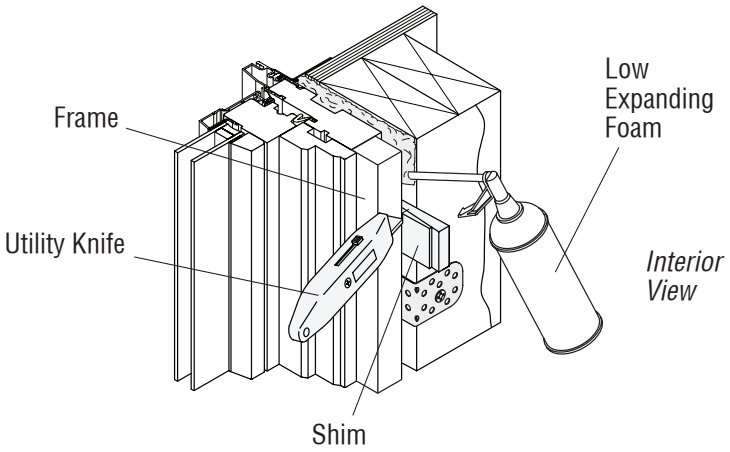

OR

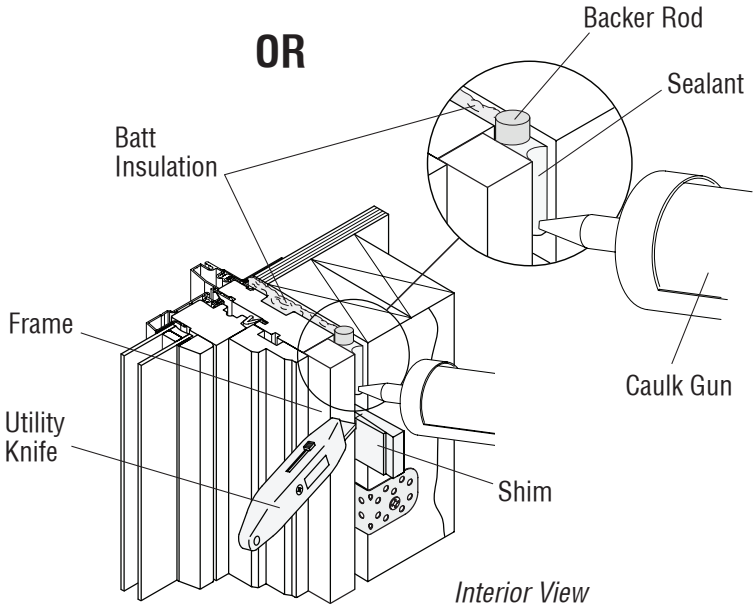

9. Flash and Seal Unit

- Apply flashing over *Installation Flange* at sides, overlapping sill flashing and extending 2" above *Head Installation Flange* and 2" below sill flashing.
- Apply a continuous bead of sealant between *Installation Flange* and exterior frame cladding, sealing *Installation Flange* to unit frame.

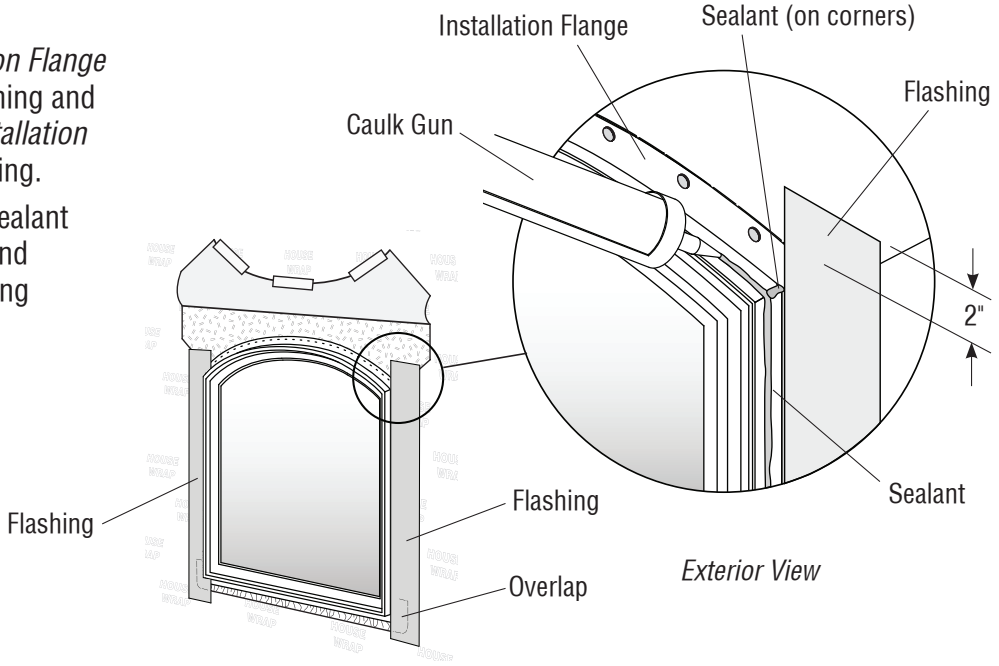

9. Flash and Seal Unit (continued)

If not installing drip cap (full width), proceed to **Units without Drip Cap (full width)** on **Page 14.**

Units with Drip Cap (full width)

- Apply 3/8" bead of sealant along top edge of *Head Installation Flange*.
- Place drip cap (full width) in sealant at head, centered over unit. Secure to building structure using 1 ¾" roofing nails through the predrilled holes.
- Apply flashing over drip cap (full width) leg at head, overlapping flashing at sides.
- Apply sealant between flashing and unit frame down sides and between flashing and drip cap (full width) along head.
- Fold house wrap flap down at head and secure with house wrap tape.

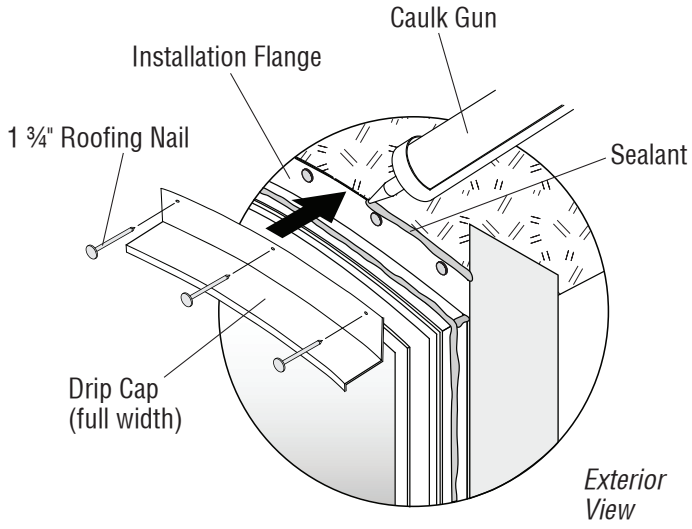

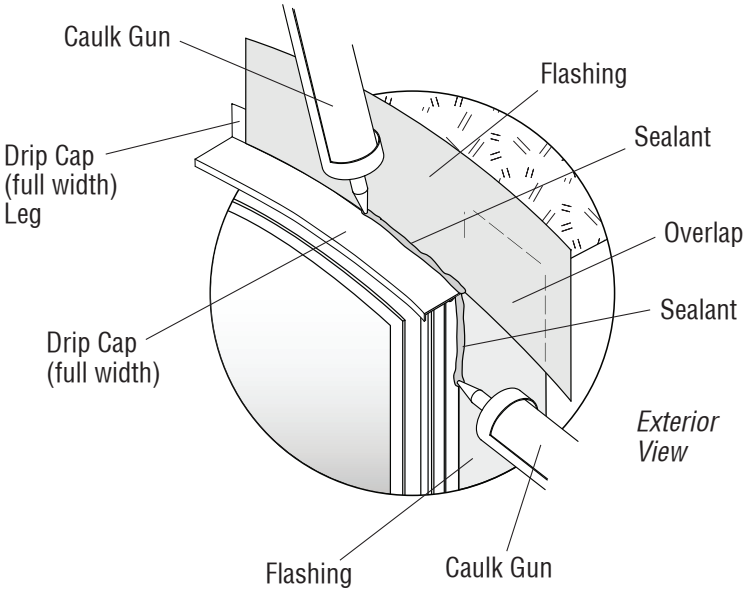

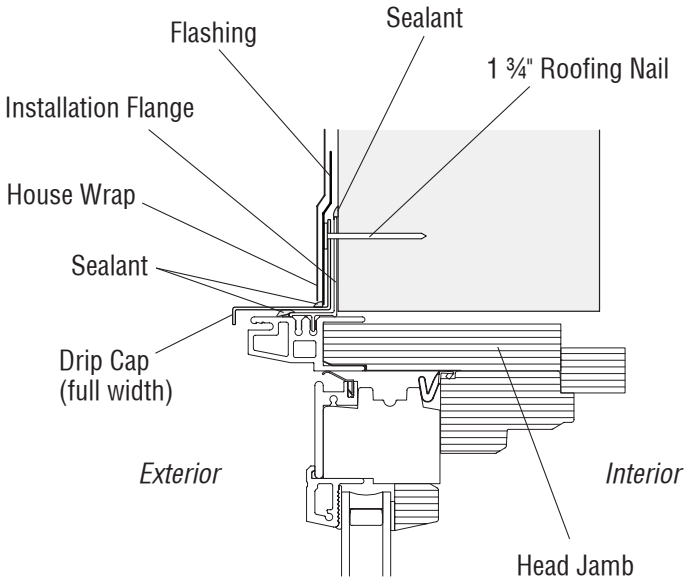

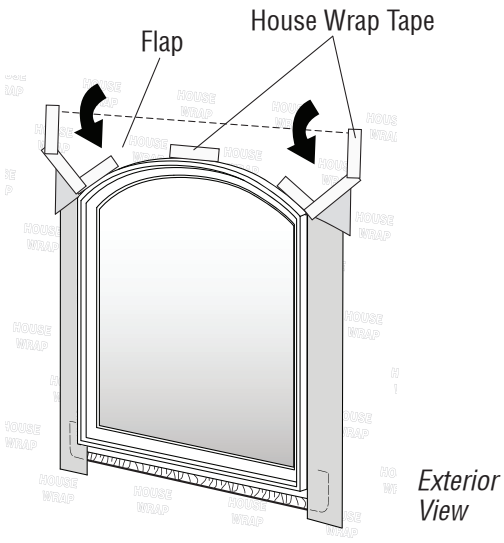

9. Flash and Seal Unit (continued)

Units without Drip Cap (full width)

- Apply flashing over *Installation Flange* at head overlapping flashing at sides.
- Apply a bead of sealant between flashing and unit frame down sides and across head.
- Fold house wrap flap down at head and secure with house wrap tape.

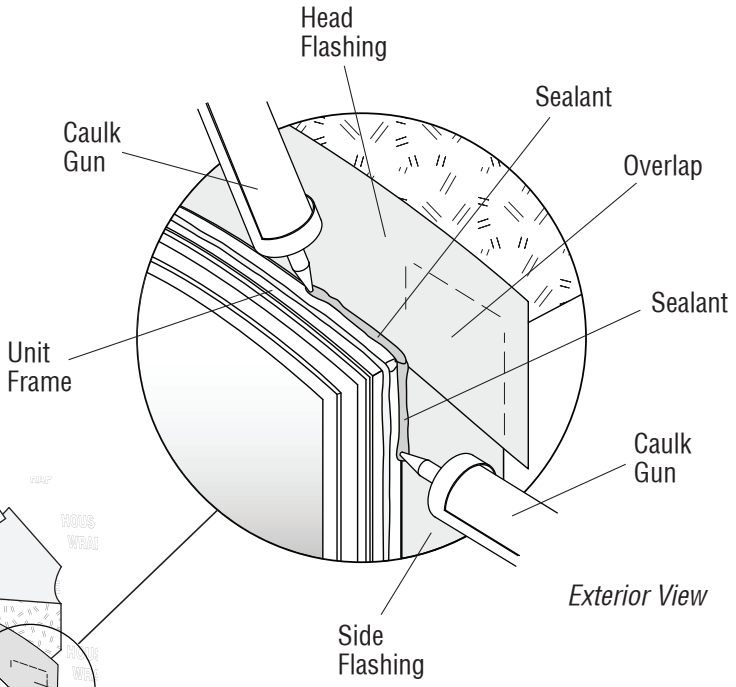

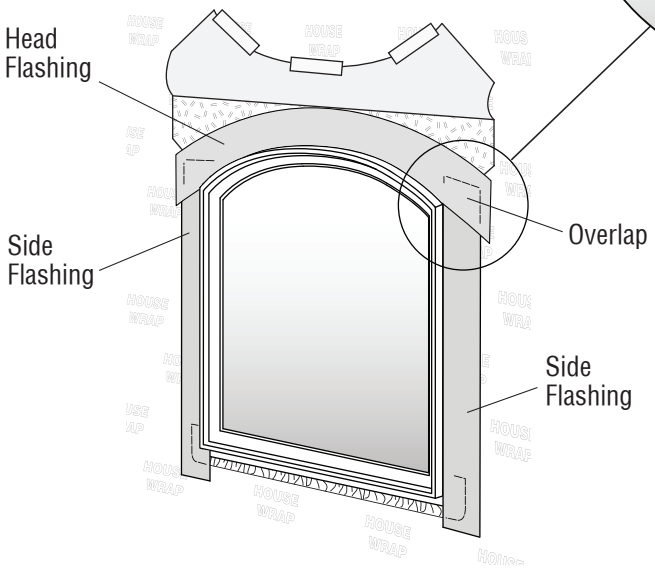

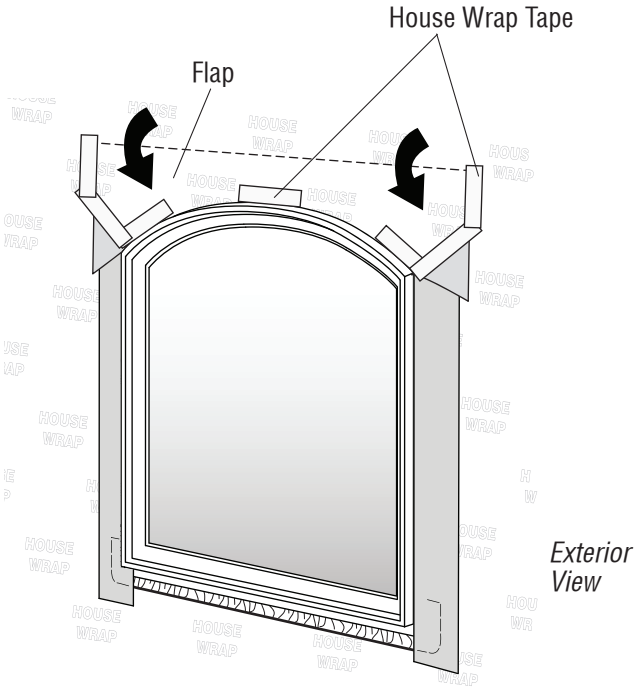

10. Apply Exterior Finish and Seal

CAUTION

A minimum space of ¼" is required around exterior perimeter of unit between frame and siding. Masonry/brick veneer installations require a minimum ½" space along sill and ¼" space around the remaining perimeter. Failure to do so may result in product and/or property damage.

NOTICE

Use foam backer rod to seal and reduce the depth of gap before filling with sealant. Follow sealant manufacturer's instructions.

- Apply exterior finish leaving ¼" space between exterior window frame cladding and exterior finish. For brick or masonry exterior, leave ½" space along the sill and ¼" space around remaining perimeter.
- Apply foam backer rod and a continuous bead of sealant around exterior perimeter of window unit between exterior window frame cladding and exterior finish.

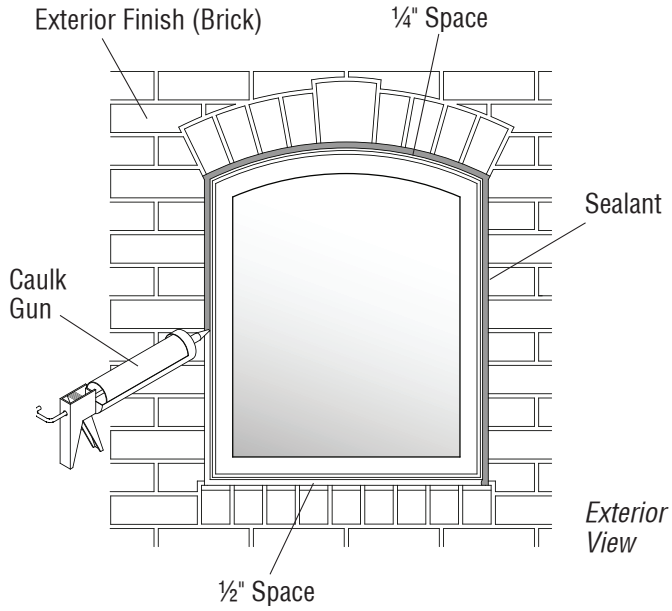

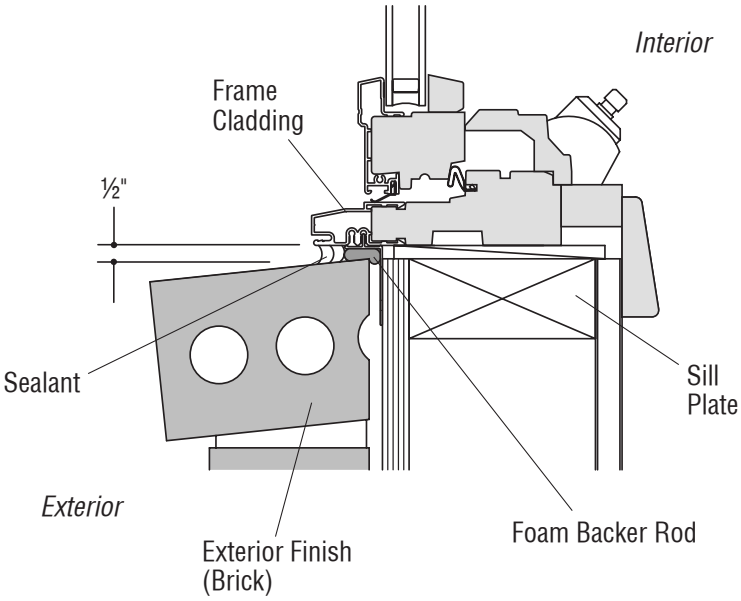

This page has been intentionally left blank.